International Journal of Research in Advent Technology, Special Issue, ICIMCE 2019
E-ISSN: 2321-9637
Available online at www.ijrat.org

Design and Development of Manually Operated Spraying and Fertilizing Mechanism

[1]Waydande S.S, [2]Ghuge N.P,[3]Gawali S.M, [4]Chavan N.R, [5]Kude V.B
[1]Assistant Professor, [2] UG Student, [3] UG Student, [4] UG Student, [5] UG Student
[1]Department of Mechanical Engineering, DYPIET, Ambi, Pune, India

Abstract*:* Majority of the sprayer pumps available in market are back mounted, hand pumps that are used to spray pesticides. Pesticide spray pump have to be pumped manually and then carried on the back for spraying in the fields. India is an agriculture-based country in which, 70% of people depends on the outcome of farming. But if we observe that with increase in population the farm gets distributed among the family and because of this, farmer in India held averagely only two-acre farm. Also, economically, farmers are very poor due to which they are unable to purchase tractors and other costly equipment's hence they use traditional method of farming. Agriculture sprayer vehicle operates the pump automatically as it moves, pump is mounted on vehicle so no stress to operator, very low cost. The pump is mounted on the vehicle so the farmer / labour does not have to carry it, so less fatigue. The pumping mechanism is connected to the rear wheel shaft through a gear train. Thus, motion of the wheel is converted into automatic pumping of the pumping system.

The secondary mechanism used is that of the solid fertilizer sprayer that is used to spray fertilizers like urea on either side of the field by a centrifugal thrower mechanism in form of the disk and bevel gear pair the project work involves the theoretical design of components for strength.

Index Terms - Fertilizer spreader, pesticide spraying Component.

1. INTRODUCTION

India is set to be an agriculturally based country approximately 75% of population of India is dependent on farming directly or indirectly. Our farmers are using the same methods and equipment for the ages. e.g. seed sowing, spraying, fertilizing weeding etc. There is need for development of effective spraying and fertilizing machine for increasing the productivity. As far as Indian scenario is concerned, more than 75 per cent farmers are belonging to small and marginal land carrying and cotton is alone which provide about 80 % employment to Indian workforce. So, any improvement in the productivity related task help to increase Indian farmer's status and economy. The current backpack sprayer has lot of limitation and it required more energy to operate. Thus, there is need of development in this sector and most commonly on fertilizers pesticides spraying technique, because it requires more efforts and time to spray by traditional way.

Figure 1: Conventional fertilizer broadcasting

Figure 2: Backpack type spraying

2. LITERATURE REVIEW

Narode R. R. et al,[1] developed a manually operated fertilizer spreader. The system consists of three wheels, two at the front and one at the back. These two wheels at the front are used to impel the fertilizer. The two hoppers are used to store the fertilizer; these hoppers are placed at some height from the wheel axle so that the fertilizer falls on to the impeller. The impeller is mounted on output shaft. Hooper opens on Impeller eccentrically and due to centrifugal action fertilizer spreads in the farm. This high value of centrifugal force is generated by the help of proper gear reduction ratio.

Shailesh Chaudhar et al,[2] developed a fertilizer spreader machine that can spread the fertilizer over a fallow land by dropping the fertilizer over the impeller disc. The project design was divided in to three levels, top level, middle level and bottom level. Top level consists a solar module, middle level consists a hopper, impeller disc and motor. The bottom level consists of tires. The whole design is supported by frame and column. This project has solved the problem of traditional way of fertilization.

Akhil P T et al.[3] developed and fabricated a trolley mounted fertilizer spreader. The proposed fertilizer spreader uses a trolley type of mechanism. The main part is spreader disk, which helps for uniform spreading. The feed for the disk is from the wheels of the trolley using gear transmission. By using this spreader, a lot of time can be saved, human effort used for carrying heavy bags of fertilizer is reduced and wastage of fertilizer can also be avoided.

Hao Lvet et al,[4] . proposed an approach for research and optimized design of outer groove wheel fertilizer spreader and granular compound fertilizer. We first build a 3D discrete element method.

D.A. Madaet et.al,[5] In this research paper author has mentioned importance of mechanization in agricultural by giving examples. The conclusion from the paper was need of multifunctional single axel vehicle for pre and post harvesting. We have taken this as base for our research and further production of our multifunctional agricultural vehicle.

3. PROBLEM DEFINITION

The farmers who use these types conventional backpack sprayer faces many types of problems like fatigue, tiredness, pain in spinal cord and muscles etc. Following problems can take place by use of this conventional type of pump.

Commonly problems

- Heavy in weight causes difficulty in lifting manually.
- Fatigue to the operator due to heavy weight.
- Due to heavy weight during spraying, operator feel very tiredness and fatigue which reduces his efficiency.
- Big size of pump cause inconvenience to the operator.
- Poor selection and quality of equipment.
- These problems combined with a lack of awareness and technical knowledge and inadequate maintenance and poor field use of equipment has led to unacceptable risks to environment and human health.
- Manually operated sprayers are slow and labour intensive so lots of time and cost is utilized in sprayer more over the pesticide chemicals are injurious and hazardous to health.

4. OBJECTIVES

- To reduce the Human efforts and labour cost.
- To improve the productivity and reduce time required to complete the task.

5. WORKING PRINCIPLE

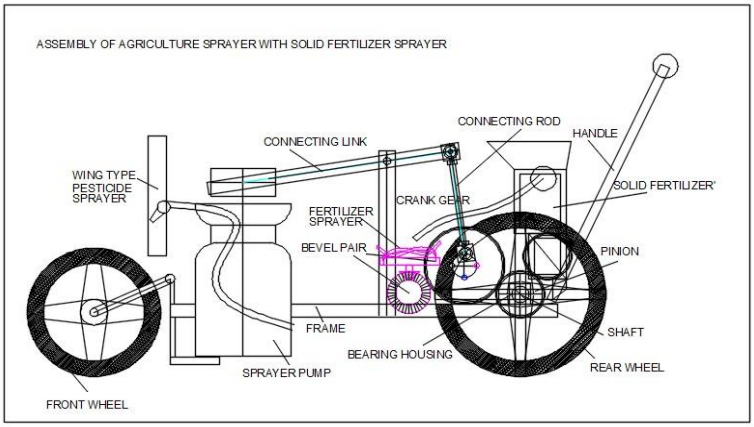

Figure 3 Model of sprayer and fertilizer

The construction and working of the innovative agricultural sprayers are as follows:

a) Base frame or chassis (MS 250mm *500mm)

The base frame of chassis is a mild steel fabricated structure that holds the entire assembly of the sprayer. The rear side carries the rear wheel shaft that carries the rear wheels the front wheel steering carries the front wheel bracket which provides the necessary turning effect.

b) Drive Assembly

The drive assembly comprises of the driver pinion on rear shaft, and the spur gear on crank. Thus, when the vehicle moves in forward direction the wheels will rotate the rear wheel shaft and thus the driver gear drives the driven gear and there by the intermediate shaft. And the pitman arm which reciprocate the piston of sprayer.

c)Pump System

The pump system comprises of sprayer mechanism of 3liter capacity integrated with inbuilt pump and sprayer.

d) Air storage and pesticide storage (3 litre)

The compressed air is stored in the air chamber of storage tank and the pesticide is stored in the liquid chamber; the sprayer connected to the tank sprays this liquid pesticide using the compressed air.

e) Solid fertilizer storage container (up to 5Kg)

This arrangement is used to store the solid fertilizer and is provided with a tee element to equally distribute the fertilizer to the both sprayer elements.

6. DESIGN

- ***Design Of Rear Wheel Shaft***

Material of shaft: - EN 24 (40 N; 2 cr 1 Mo 28)

Ultimate Tensile Strength = 720N/mm2

Yield strength = 600N/mm^2

Tdesign = 200x175x0.35 =12250 N-mm = 12.25N-m

Fs_{all} = 0.18 x Sult = 0.18 x 720

= 130 N/mm^2

As we are providing dimples for locking on shaft; Reducing above value by 25%.

fs_{all} = 0.75 x 130

= 97.5 N/mm^2

$$T_{design} = \frac{\Pi}{16} fs_{all} \; d^3$$

d= 8.2mm

Diameter of shaft 12mm as the shaft end carrying the wheel has a pilot bore diameter 12mm.

f) Fertilizer sprayer

The fertilizer sprayer is a disk with impeller vanes that will throw the fertilizer falling on to it through centrifugal force. The rotary motion required is obtained through the spur gear and bevel gear arrangement. The spur gear from wheel will drive the crank gear, which in turn rotate the input gear to the sprayer disk bevel gear pair and thus the disk spins at high speed to throw out the fertilizer.

Working

1) When the handle is pushed the sprayers, vehicle moves forward rotating the wheels, hence the spur pinion makes the crank gear to rotate.

2) The Crank gear acts like the crank which in turn drives the connecting rod and makes the connecting link to oscillate about the boom hinge.

3) The connecting link is engaged to the piston of the sprayer pump which moves forward and backward to give pump action and increase pressure inside the pump which is further used to spray the pesticide when the valve is opened on the sprayer pipe.

4) Three gears are mounted on spinner shaft crank gear rotate the spur gear mounted on the centre which will rotate the bevel gears on both side of shaft. These bevel gears will rotate the bevel pinions which will be rotating the disk to throw the fertilizer.

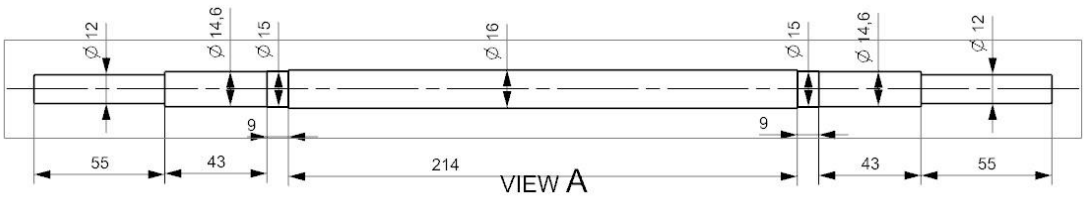

Figure 4 Rear wheel shaft

Note the maximum equivalent stress is 12.498 <97.5 N/mm2 hence the wheel shaft is safe.

- ***Design Of Spinner Shaft***

Material of shaft: - EN 24 (40 N; 2 cr 1 Mo 28)
Ultimate Tensile Strength: -720N/mm^2
Yield strength: -600N/mm^2
Coeff of friction between wheel and road surface=0.35
Tdesign = 200x175x0.35 =12250 N-mm = 12.25N-m
As we are providing dimple for locking on shaft Reducing above value by 25%.

Fs_{all} = 0.18 x Sult = 0.18 x 720
= 130 N/mm^2

fs_{all} = 0.75 x 130
= 97.5 N/mm^2

$$T_{design} = \frac{\Pi \, fs_{all} \, d^3}{16}$$

Diameter of shaft 8 mm as the shaft end carrying the bevel gear which has a pilot bore of 8mm.

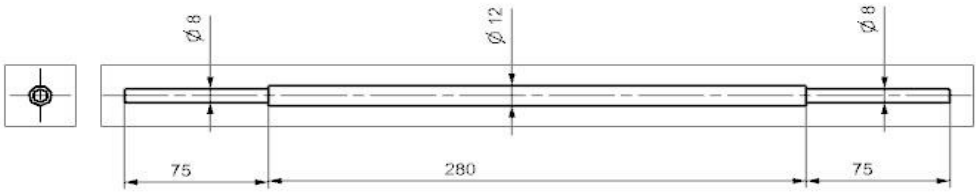

Figure 5 spinner shaft

As the maximum stress induced in the material 12 Mpa is less than the allowable value of 108 Mpa the shaft is safe.

- ***Design Of Spur Pinion & Gear For Drive From Input Shaft To Crank***

Maximum load =Maximium torque / Radius of gear
No of teeth on gear = 120
No of teeth on pinion = 60
Module = 1.275mm Load=200 N
b = 12.75
Material of spur gear and pinion = Nylon-66

The gear and pinion arrangement whereas pinion have 60 teeth and gear has 120 teeth share the entire tooth load.

- ***Design Of Spur Pinion & Gear For Drive From Crank To The Spinner Shaft***

Maximum load =Maximum torque / Radius of gear
No of teeth on gear = 120
No of teeth on pinion = 24
Module = 1.275mm Load=200 N
b = 12.75
Material of spur gear and pinion = Nylon-66

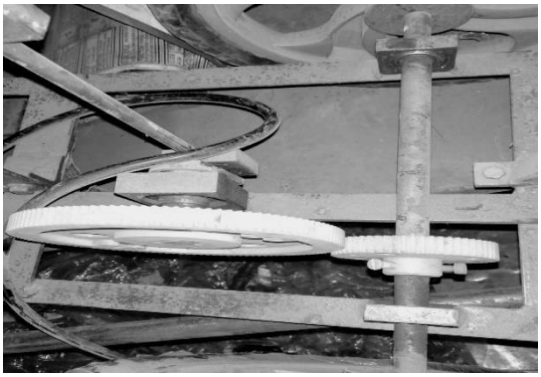

Figure 6 Meshing of spur gear

- **DESIGN OF CRANK ARM**

Crank arm is subjected to direct shear failure owing to the load of the Gear action, Crank arm is having a circular section of 14 mm diameter subjected to direct shear Cam force is give by relation (Cf) = T / r = 6 x 1000 / 60 As the eccentricity radius of 60 mm is considered for the pump rocking action (Cf) = 100 N

Material: - EN 9
S_{ut} :-600 N/mm^2
S_{yt}:-480 N/mm^2

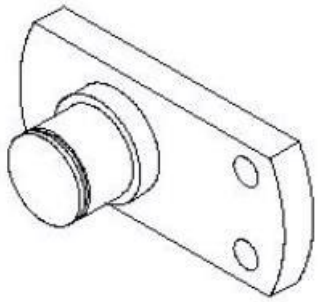

Figure 7 Crank arm

7. CONCLUSION

In this project we designed a mechanism to operate pesticide spraying pump and fertilizer throwing with the help of gear and crank arrangement. The effort which was required while using the conventional spraying and fertilizer throwing is to reduce to a great extent ultimately resulting in increased productivity.

REFERENCES

[1] Narode R. R., Sonawane A. B. , Mahale R. R. , Nisal S. S. , Chaudhari S.S. , Bhane A. B. , "Manually Operated Fertilizer Spreader", International Journal of Emerging Technology and Advanced Engineering, (February 2015).

[2] Shailesh Chaudhari, Mansuri Naeem, Prajapati Jigar, Prajapati Preyash, "Design & Development of Fertilizer Spreader Machine", International Journal of Engineering Sciences & Research, (April, 2017).

[3] Akhil P T, Aravind M G, Arjun S Balan, Arun Abraham, Sajeev A, "Design and Fabrication of Trolley

Mounted Fertilizer Spreader", International Journal for Innovative Research in Science & Technology, April 2017.

[4] Hao Lv, Jianqun Yu, Hong Fu, "Simulation of the operation of a fertilizer spreader based on an outer groove wheel using a discrete element method", science direct, Mathematical and Computer Modeling 58 (2013).

[5] Deshpande P.M., Shinde M. A., Wadile A.S., Vaidya R.R. , Shukla V.P., "Design and Development of Manually Operated
Fertilizer Spreader", International Journal for Research in Applied Science & Engineering Technology (IJRASET) (March 2018).

[6] Prof. Swati D.Kale, Swati V. Khandagale, Shweta S. Gaikwad, "Agriculture Drone for Spraying fertilizer and pesticides",
"International journal of advance research in computer science and software Engineering", volume 5, Issue 12, (Dec-2015).