International Journal of Research in Advent Technology, Special Issue, ICIMCE 2019
E-ISSN: 2321-9637
Available online at www.ijrat.org

Design & development of vertical smart parking

Mr.Kesare Swapnil Shivaji, Mr.Pawale Ketan Krishna, Mr.Rawate Rohit Ramesh
Prof.Ghorpade.S.D
Dept.Of Mechanical Engineering, Nanasaheb Mahadik College Of Engineering ,Peth.
Shivaji University kolhapur Maharashtra, India.

Abstract- The aim of this research is to develop & implement an automatic parking system that will increase convenience & security of residential parking system. The automatic parking system will be able to have less interaction of humans. The economy analysis technique will help in analyzing the project feasibility. Thus an efficient, reliable & safe automatic underground parking system will increase availability of space for car parking. In metropolitan cities, vehicle parking has become a major concern in all busy areas and a good traffic system needs a good parking system. Different types of vehicle parking are applied worldwide namely Multi-level Automated Car Parking, Automated Car Parking System, Volkswagen Car Parking, etc. This model will be further useful for different branches of engineering in order to develop different types of automations like PLC, Micro controller and computerization etc. In this paper we have tried to develop a mechanism for parking system which has many advantages and benefits.

1. INTRODUCTION

The automated parking management system has existed for a long time, but is only now finding mass demand for the efficient and effective parking solution. The demand for parking is constantly increasing while the space for large parking lots is decreasing. As a result, automated parking management systems have filled the void by parking more cars in less space and improving profitability, safety, environment considerations and all related expenses. With this in mind, knowing the background of the parking garage can be an interesting topic. The automated parking system was actually first developed in 1925 by Max Miller in New York City. The designs original purpose was simple to lift a vehicle off the ground, such as in the case of a stalled or broken down car on a street. It was never used. It was not until 1941, as cars crowded cities that the first attempt to vertically park cars was attempted. O.A. Light created a device that allowed three cars to park vertically, three on each side for a total capacity of six. A year later, E.W. Austin invented the automated garage. His invention became the leader in automated parking during the 40s, 50s and 60s. These systems were called Bowsers, Pigeon Holes and Roto Parks. Throughout these years, developments and design changes were made to continually improve the automated car park. In 1964, Eric Jaulmes invented what is most similar to the automated parking management systems of today. His system had a valet drive the car into an elevator. The elevator would then take the car to a predetermined spot and the valet would park the car in that space. Then on the return down, if it had been requested, the valet would stop at another spot to get a car to be returned. At the same time, the three former systems were revitalized to remove the valet altogether allowing the lift to tip the car into place and the opposite on retrieval.

a. Integrated Car Parking Solution

Customize application suitable for various types of landscapes and buildings Structures available below the ground. Ease control by soft touch on the operation panel screen. When a vehicle stops in front of the entrance, automatically door opens and trolley transfers the vehicle to parking cell. Misleading of this solution is it should be undergrounded. By this investment increases and lot much space utilization is to be made.

b. Automated Car Parking

The driver will pull the car onto a computer-controlled pallet, turn it off, and get out. The pallet is then lowered into the abyss of parking spaces, much like a freight elevator for cars, except it can also move sideways, not just up and down. There's an array of laser sensors that let the system know if the car doesn't fit on the pallet (although it's big enough to fit a mid-sized SUV),. The system retrieves the car when the driver returns, although this might take some time and creative manoeuvring. Cars are parked two deep in some spots, so a specially tailored software system has to figure out the logistics of

shuffling the various vehicles around as needed to retrieve a specific car. And for those, like me, who find it difficult to turn their vehicle around after pulling out of a space, there's an underground turntable that turns the car around before it is lifted to the surface, so the car is facing out into the driveway, ready to go. Backing out of garages or parking spaces is one of the most common causes of accidents.

c. Multi-Level Parking

A multi-level car parking is essentially a building with number of floors or layers for the cars to be parked. The different levels are accessed through interior or exterior ramps. An automated car parking has mechanized lifts which transport the car to the different levels. Therefore, these car parks need less building volume and less ground space and thus save on the cost of the building. It also does away the need for employing too many personal to monitor the place. In an automated car parking, the cars are left at the entrance and are further transported inside the building by robot trolley. Similarly, they are retrieved by the trolley and placed at the exit for the owner to drive away.

2. PROBLEM STATEMENT

Problem Statement and Background:-a. Market survey

During this period detail market survey has been done to learn available parking systems and their utility also their literatures of different types of parking systems and its difference between have been observed.

b. Problems in existing systems

The problems regarding the existing system have been found such as, Complicated programming, High budgets, Unfeasible design, high end robots, etc.

c. Conceptual Design.

So in this project, taking problem statement from above and studying the fundamental engineering concepts various concepts regarding modern parking system are prepared and amongst those best concepts design has been selected for further phases.

Features

- It ensures quick and automated parking and easy retrieval of vehicles.
- Up to 6 cars can be easily and safely parked in the designed model.
- The surface space required is equivalent to the parking space of two cars only.
- Most suitable for parking in offices, malls and similar places .
- the smart vertical parking system is engineered to ensure driver safety by use of an electronic safety zone.
- Low maintenance levels are required by the system.
- Does not require any parking attendant.
- It can be easily constructed in a small area, just requiring a simple concrete base and 3 phase electricity.

3. PROCESS IDENTIFICATION

The basic structure of the SMART VERTICAL PARKING SYSTEM can be described with the help of following block diagram. Fig.1 depicts the interconnection between the various subsystems of the project. Mechanical parking equipment is also called stereo garage. As compared to the existing parking arrangements, the most obvious advantage is maximum space utilization; it is safer and more convenient. the smart vertical parking system is totally automated with the user being given a unique ID corresponding to the trolley being allocated to him/her. This kind of equipment is useful to solve the issue of limited parking space available in busy cities. Evidently, it can be seen that the number of private cars is increasing every year. Private garages, where only a single car can be housed at a time, do not provide a feasible solution to the problem since many families own more than one car. So the task was to design mechanical equipment that can store 6 cars in one normal garage. It is called a rotary parking shaft.

The idea is to park and move cars with no disturbance to the already parked cars in smart vertical parking system. in a smart vertical parking system the power used for functionality of different component are obtained by normal power supply circuit as shown Fig.2. The distribution of power is mainly done in two ways one is for main unit i.e. one is given to relay and other to RFID. This is done for ease of power distribution equally and necessarily in required areas. There are many types of power supply. Most of them are used to convert high voltage AC mains electricity to the required low voltage supply for electronic circuits and other devices. The power supply system comprises of a series of blocks, with every block performing a different task in various stages. The transformer functions to step up or step down the input line voltage and isolates the power supply from the power line. The rectifier section is responsible for the conversion of the alternating current input signal to a pulsating direct current. The smoothing block eliminates any unwanted spikes or harmonics present in the signal being applied to it. The final block, i.e., the regulator does just what its name implies. It helps maintain the output of the power supply at a constant level in spite of major changes in load current or input line voltages.

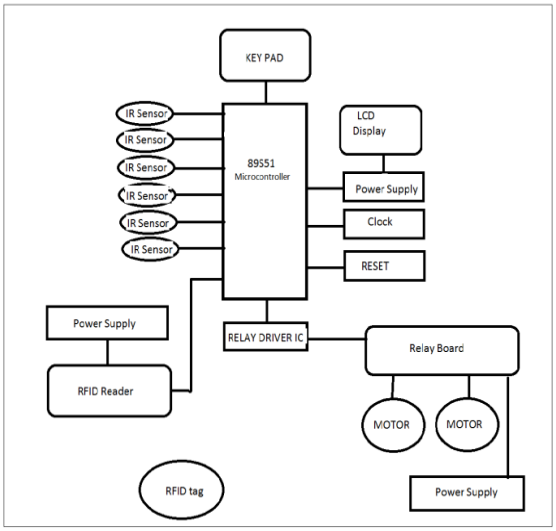

4. VERTICAL CAR PARKING

A Prototype this project deals with manufacture of a Prototype of Vertical Car Parking System. This system has been implemented to reduce the excess use of land space which is already very scarce in metro cities. Different types of vehicle parking are applied worldwide namely Multi-level Automated Car Parking, Automated Car Parking System, and Rotary Parking System. The present project work is aimed to develop a scale down working model of a car parking system for parking cars within a large parking area. The chain and sprocket mechanism is used for driving the parking platform. This total prototype is powered by a D.C motor. When the car comes on the ramp the switch will be activated and the bucket comes to carry the vehicle. When the switch will be operated by the operator, sprockets starts to rotate and the new space will be adjusted for new vehicle. Planners, developers, architects are finding out solutions to tackle this problem of parking, so we took this opportunity to bring the technology of automated parking to where it is needed.

5. THEORY

We would like to introduce our project showing different types of parking as of now which are widely used and the reasons why we had to make this choice from them.

Rotary Car Parking System

Why Rotary Car Parking System:

This Unique Automated Mechanical Parking is designed to permit up to a maximum of 12 cars or 10 SUV's to be parked easily and safely, on the surface area required to park 2 cars. It is simple to operate with the driver parking and leaving the vehicle in the system at the ground level. Once the driver leaves the incorporated safety zone the vehicle is automatically parked by the system rotating to lift the parked car away from the bottom central position. This leaves an empty parking space available at the ground level for the next car to be parked on.

The parked car is easily retrieved by pushing the button for the relevant position number the car is parked on. This causes the required car to rotate down to ground level ready for the driver to enter the safety zone and reverse the car out of the system.

Except Rotary Parking System all other systems use a large ground area, Rotary Parking System is developed to utilize maximum vertical area in the available minimum ground area. It is quite successful when installed in busy areas which are well established and are suffering with shortage of area for parking.

Although the available designs are made on the ground level, the challenge in front of us is to make the same design for the underground to utilize the maximum benefit of the parking space availability below the ground level.

6. WORKING PRINCIPLE

There is one pallet for each parking space; all pallets could rotate in clockwise or counterclockwise direction to the ground floor according to the parking or retrieval order (from the control panel). Each pallet is marked with one number; driver can easily park or retrieve the car simply by pressing the button of the pallet number on the control panel. Full automatic operation.[1]

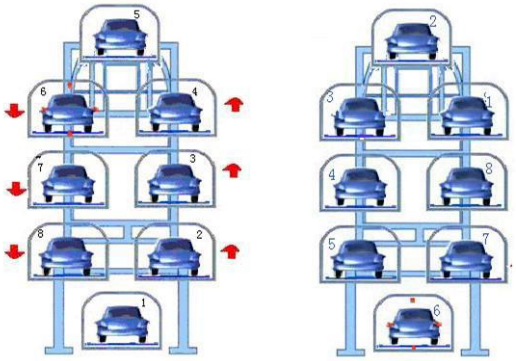

Fig.1: Working Principle Of Rotary Smart Parking System

- Height required for the system having 8 cars ~ 9850mm
- Height required for the system having 10 cars ~ 11680mm
- Height required for the system having 12 cars ~ 13500mm
- Height required for the system having 14 cars ~ 15400mm
- Height required for the syste

7. CONSTRUCTIONAL DETAILS

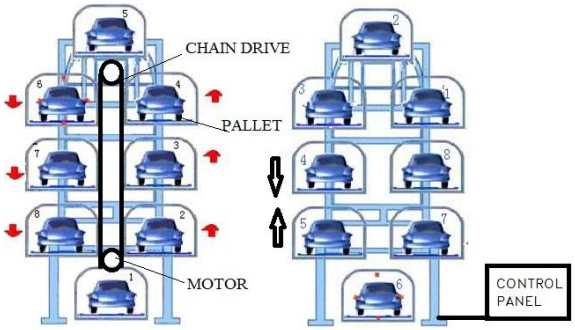

Proposed mechanism for vertical parking system

This project's main purpose is to produce a real life solution to the car parking problem which the whole

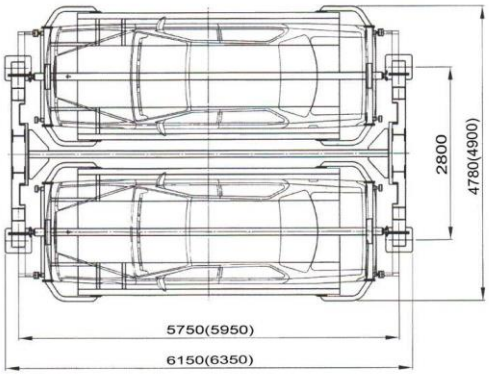

world is facing frequently. People usually roam around in the parking lots trying to find a suitable place to park in. To solve that problem we have created the automatic car parking system, using an open source hardware, programmable sensors and the use of computers to provide an interface to understand the digital output produced. In the proposed set up by using arduino system we will to automation. In this by using keypad we can select which compartments car we have

To move or require according to that we can select the compartment by using arduino circuit and that car of that compartment will get come at ground level where the car loading or unloading is done.

The concept of this project is to lower the cost and time requirements for a small scale user. The brief idea is to develop a system which will perform the wire bindingoperation. In this a mechanical assembly interfaced with micro controller based circuit is used to perform these tasks. Mechanical assembly will consist of dc motors which passes the wire with his rotations.

The system will consist of the following control & monitoring parameters.

Hardware:

- Micro-controller unit
- Dc motor
  - Power supply
  - Lcd display
  - Keypad

- Relay drive circuit
- Dc motors
- Magnetic sensor

MICROCONTROLLER AT89S52:

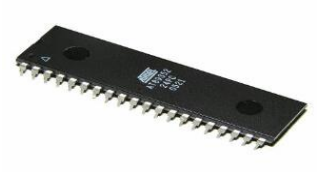

Fig.2 Microcontroller

MICROCONTROLLER AT 89S52 FEATURES:

- Compatible with MCS 51 products
- 8k bytes of in system Re-programmable Flash Memory
- Fully static operation : 0 Hz to 24 MHz
- 256 x 8 bit internal RAM
- 32 programmable I/O Lines
- Three 16 bit Timer or Counters
- 8 Interrupt sources
- Programmable serial channel
- Low power Idle & power down modes

MICROCONTROLLER AT 89S52 DISCRIPTION:

The Microcontroller IC 89S52 has 256x8 bit internal RAM which is most important feature for this application. Here eight to ten readings can be recorded in RAM after each half an hour to achieve data logging.The Timer/Counter application of 89S52 is used to count the pulses from proximity sensor.

The interrupt pin INTR0 is used to switch into different setting modes the serial channel is used to get interface with pc for data logger application.

The AT89C52 provides the following standard features: 8Kbytes of Flash, 256 bytes of RAM, 32 I/O lines, three 16-bittimer/counters, six-vector two-level interrupt architecture, a full duplex serial port, on-chip oscillator, and clock circuitry. In addition, the AT89C52 is designed with static logic for operation down to zero frequency and supports two software selectable power saving modes.

The Idle Mode stops the CPU while allowing the RAM, timer/counters, serial port, and interrupt system to continue functioning. The Power down Mode saves the RAM contents but freezes the oscillator, disabling all other chip functions until the next hardware reset.

Capacitors:

a) 1uf Electrolytic capacitor:

Fig. 3 Capacitor 1uf

This is a 1uF (micro farad) electrolytic capacitor. Used for much application, very commonly used with MAX232 IC for charge pumps and bypass capacitor.

1000uf Electrolytic capacitor:

Fig. 4 Capacitor 1000uf

Description: Electrolytic decoupling capacitors 1000uF/25V. These capacitors are great transient/surge suppressors and work well in high-voltage and audio applications.

7805 Voltage regulator:-

A voltage regulator is designed to automatically maintain a constant voltage

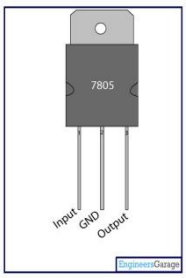

Fig. 5- 7805 Voltage regulator

Table no.1- 7805

Pin No	Function	Name
1	Input voltage (5V-18V)	Input
2	Ground (0V)	Ground
3	Regulated output; 5V (4.8V-5.2V)	Output

Features:

- Output voltage tolerances of +-5% over the temperature range.
- Output current of 100mA.
- Internal thermal overload protection.
- Output transistor safe area protection.
- Internal short circuit current limit.
- No external components.

8. WORKING

A **ULN2003A** is a high-voltage, high-current Darlington transistor array.[1][2]

It consists of seven NPN Darlington pairs that feature high-voltage outputs with common-cathode flyback diodes for switching inductive loads.

It is very similar to the ULN2801A, ULN2802A, ULN2803A,[3] ULN2804A, and ULN2805A, only differing in logic input levels (TTL, CMOS, PMOS) and number of inputs (8).

The drivers can be paralleled for higher current capability, even stacking one chip on top of another, both electrically and physically has been done.

Features:

- 500 mA rated collector current (single output)
- 50 V output
- Includes output flyback diodes
- Inputs compatible with various types of logic

Relay:-

Fig. 6 Relay

A relay is an electrically operated switch. Many relays use an electromagnet to mechanically operate a switch, but other operating principles are also used, such as solid. Relays are used where it is necessary to control a circuit by a low-power signal (with complete electrical isolation between control and controlled circuits), or where several circuits must be controlled by one signal. The first relays were used in long distance telegraph circuits as amplifiers: they repeated the signal coming in from one circuit and re-transmitted it on another circuit. Relays were used extensively in telephone exchanges and early computers to perform logical operations.

PMDC motor :-

In our project we have used the PMDC Motor for to give drive to chain drive.

Fig. PMDC motor

In a dc motor, an armature rotates inside a magnetic field. Basic working principle of DC motor is based on the fact that whenever a current carrying conductor is placed inside a magnetic field, there will be mechanical force experienced by that conductor. All kinds of DC motors work in this principle only. Hence for constructing a dc motor it is essential to establish a magnetic field. The magnetic field is obviously established by means of magnet. The magnet can by any types i.e. it may be electromagnet or it can be permanent magnet. When permanent magnet is used to create magnetic field in a DC motor, the motor is referred as **permanent magnet dc motor** or **PMDC motor**. Have you ever uncovered any battery operated toy, if you did, you had obviously found a battery operated motor inside it. This battery operated motor is nothing but a **permanent magnet dc motor**

or **PMDC motor**. These types of motor are essentially simple in construction. These motors are commonly used as starter motor in automobiles, windshield wipers, washer, for blowers used in heaters and air conditioners, to raise and lower windows, it also extensively used in toys. As the magnetic field strength of a permanent magnet is fixed it cannot be controlled externally, field control of this type of dc motor cannot be possible. Thus permanent magnet dc motor is used where there is no need of speed control of motor by means of controlling its field. Small fractional and sub fractional kW motors now constructed with permanent magnet.

Keypad

Fig. 7 Keypad

This 16-button keypad provides a useful human interface component for microcontroller projects. Convenient adhesive backing provides a simple way to mount the keypad in a variety of applications. The Keypad 4x4 features a total of 16 buttons in Matrix form. This is a membrane keypad with no moving parts. It has a nice overlay depicting a telephone type keypad with additional four functional buttons. A female 8-pin berg connector is provided for interfacing it with your microcontroller circuits.

Features

- Ultra-thin design
- Adhesive backing
- Excellent price/performance ratio
- Easy interface to any microcontroller
- Dimensions: Keypad, 2.7 x 3.0 in (6.9 x 7.6 cm)

9. CONCLUSION

Various system proposed by different authors helps us to cogently in reserving and also annihilating the need of searching for parking spaces in private parking lots. Researchers have acquired the systems which dynamically arrange the scheme for different drivers as per their requirement, based on the real-time parking information. Thus, this concludes that the paper simplifies the context for the researchers for innovating various techniques to administrate and solve the problems faced by drivers on day to day basis.

REFERANCE:

[1] Mr. R. S. Khurmi & J. K. Gupta Machine Design *Pub*.: Eurasia Publishing House Pvt. Limited.
[2] Rotary Automated Car ParkingSystem Author:- Chandni Patel, Monalisa Swam
[3] D Wadhwankar, K More, V Bajaj, Experimental Investigation of Boring Tool Vibration for Improving Surface Finish by using Passive Damper. International Journal of Current Engineering and Technology 6, 16-22
[4] 5. JNR D.M.Wadhwankar , Kiran More, Experimental Investigation and Finite Element Analysis of Boring Tool vibration by using passive damper. International Journal of Advance Engineering and Research Development 3 (12) 171-178.