International Journal of Research in Advent Technology, Special Issue, December 2018
International Conference on Mechanical and Civil Engineering (ICOMACE-2018)
E-ISSN: 2321-9637
Available online at www.ijrat.org

Development of Solar Operated Robotic Vehicle

Elayaraja.D[1],Arunkumar[2].A[2],Ramabalan.S[3]
Department of Mechanical Engineering[1,] ,QIS College of Engineering and Technnolgy,Ongole[1],
E.G.S.Pillay Engineering College, Nagapattinam
Email:elayaraja.d@qiscet.edu.in ,

Abstract- Solar energy is abundantly available renewable energy source which is eco-friendly and pollution free. The basic principle of the vehicle is use to use solar energy that is stored in a battery during and after charging it from a solar panel. This spy robot is utilizing embedded system namely Radio frequency (RF) and Dual Tone Multi frequency (DTMF) Technology. The main features of work are that the images of photographs and quality of the video obtain from the vehicle is are very good and the vehicle can be operated in night using night vision camera.

Index Terms-Solar energy, DTMF, Spy robot

1. INRODUCTION

Spy robots are developed to prevent terrorist attack. The technology used may be RF technology. Kapadnis et al developed a robot that could quietly enter into enemy area and sends information via wireless camera and the robot is color based on the surface color (1). The DTMF technology is also importantly used to prevent the terror attack (5). Mehta et al (2) a spy robot can also be controlled by a computer system using its key board. We developed spy robot that it will be used for the transmission of audio and video signals from the destination to the source. Mokhaing (3) developed a spy robot which is used to transmit video data to the intervention troop. They are made to easily move on a transport. It is made up of wireless camera and antenna.

Gudhka (4) et al suggested that as there was technological advancements used by the military forces for reducing the risk of their causalities and to defeat their enemies. With the development if sophisticated technology, it mostly relies on the high-tech weapons or machinery being used.

Dhumale et al (7) simple moving platform containing mobile phone that is remote-controlled over Internet via Skype using DTMF tones. The robot is capable to go in autonomous mode on a pre-defined

2. MATERIALS AND METHODS

2.1 Micro controller: Micro controller A589C51 along with memory and programmable input or output peripherals is used for programming memory in the form of ferro electric RAM, NOR flash or OTP ROM is also often included on chip, as well as a small amount of RAM. Micro controllers are designed for embedded applications in contrast to the microprocessors used in personal.track consisting of vertices made up of GPS.

2.2.H-bridge

It is derived from the actual shape of the switching circuit which control the motion of the motor. It is also known as "FULL BRIDGE" basically there are four switch elements in the H-Bridge. The four switching elements named as "High side left", "High side right","Low side right","Low side left".

When these switches are turned on in pairs motor changes its direction accordingly. Like, if we switch on High side left and Low side right then motor rotates in forward direction, as current flows from power supply through the motor coil goes to ground via switch Low side right.

2.3GSM Network

A GSM network is composed of several functional entities, whose functions and interfaces are specified.The mobile station is carried by the subscribed. the base station system controls the radio link with the mobile station.The network subsystem, the main part of which is the mobile services switching centers (MSC), performs the switching calls between the mobile users, and between mobile and fixed network users.

2.3.1 Mobile station

The mobile station consists of the mobile equipment and a smart card called subscriber identity Module. The sim provides personal mobility, so that the user can have access to subscribed services irrespective of a specific terminal. By inserting the sim card into another GSM terminal, call can be received at that terminal.

2.3.2 Network substation

The central components of the network subsystem are the mobile service Switching Centre. It acts like normal switching node and additionally provides all the functionally needed to handle a mobile subscriber as registration, authentication, location updating, and call routing to the roaming subscribe.

2.4 LCD

A liquid crystal display is a thin, flat display device made up of any number of color or monochrome pixels arranged in front of a light source. A general-purpose alphanumeric LCD display, with two lines of 16 characters.

2.5 KEIL software

The devices database is selected and the toll settings are configured. The source file in C language or assembly language is created. The errors in sources files are corrected. The link application was tested.

2.6 Solar System

Solar panel is a panel to absorb the sun's rays as a source of energy for generating electricity or assembly of typically photovoltaic array of a photovoltaic system that generates and supplies solar electricity for the vehicle.

2.7 Battery

An electric battery is a device consisting of more electrochemical cells with external connections provided to power for the vehicle.

2.8 Camera

V380 is a new generation of intelligent household cloud camera can easily realize the remote video monitoring and management.

3. WORKING

The sun's rays transmit heat. The heat is used in thermal system to produce electricity. The electricity is used to run the vehicle with the camera. The vehicle is used for spying purpose.
Then the GSM modem is used the device that functions the comment and outgoing process detail report via sms format.
The vehicle contains LCD display which shows the process of the vehicle. It is equipped with wireless camera having night vision capability for remote monitoring and spying purpose.
The night vision camera allows for transmitting real time night vision video even in dark environments. whatever is recorded by the camera can be viewed in the personal computer for reference.
It uses android application commands to move in front, back and left right directions. The vehicle consists of receivers interfaced to an 8051 microcontroller. On receiving command from the receiver. The 8051 microcontrollers now operate the movement through a driver IC. The android device can operate the vehicle at a good Bluetooth communication range. The Bluetooth receiver at the vehicle is used to control movement data from app to vehicle. The night vision camera mounted on robot allows for efficient spying even in the darkest areas using inferred lighting.

4. CONCLUSION

Achieve control both wireless communication mobile robot android GUI application.
A solar operated Spy robot was developed. The robot was controlled by both RF. Versatile operation of robot controller which need not modify the hardware System can further be developed by enhancing the performance and adding more features like gas sensors, thermal image sensing.

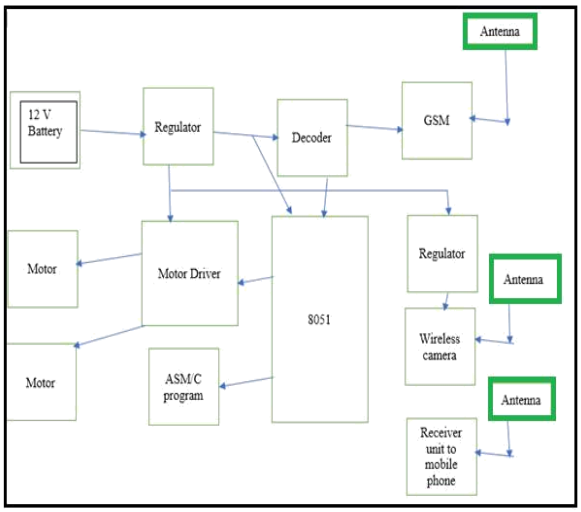

Figure 1. Block diagram of Spy robotic vehicle

Figure 2. Assembled robotic vehicle

REFERENCES

[1] Prerna Jain; Pallavi Firke N; Kapadnis; Trupti Patil; Sonali Rode.(2014):RF Based on Robot. Int. Journal of Engineering Research and Applications,

4 (4), pp.06-09.

[2] Ankit Yadav; Anshul Tiwari; Divya Sharma; Ratnesh Srivastava; Sachin Kumar;Yadav.(2016) SMART SPY ROBOT, International Journal of Science, Engineering and Technology Research Volume 5(4),pp. 973-977.

[3] Wai Mo; Mo Khaing.(2014), Wireless controlled spy robot by using pic microcontroller, International Journal of Science, Engineering and Technology Research,3(9),

[4] Kunj Gudhka; Aishwarya Kadam, Devika Kale, Manil Rupani, Dhake(2016),War Field Spying Robot Using Wireless Camera, International Journal of Electrical and Electronics Research,4(1), pp: 85-92.

[5] [4] Dhiraj Singh Patel (2013)Mobile Operated Spy Robot‖ International journal of emerging technology and advanced engineering

.

[6] ASM Shamim Hasan; Md.Khalid Hossain Jewel; Niaz Mostakim; Khalid Hossain.(2016), Smartphone Controlled Spy Robot with Video Transmission and

Object Collector, International Journal of Engineering and Manufacturing 7(6),

[7] Dhumale1,R B; Thombare,N D; Vikas Sanjay Ojha, Bangare P M.(2016), Wireless Controlled spy robot, International Research Journal of Engineering and Technology,3(8),pp.1442-1444.