International Journal of Research in Advent Technology, Special Issue, March 2019
E-ISSN: 2321-9637
International Conference on Technological Emerging Challenges (ICTEC-2019)
Available online at www.ijrat.org

Microcontroller Based Electronic Voting System Using SMS

[1]Mahesh Dronadula, [2]Sowmya.S, [3]Gopikrishna.V, [4]Mohsina.Sk, [5]Narendra.CH
[1]Assistant Professor, Dept of ECE, Tirumala Engineering College, Narasaraopet, A.P, India
[2,3,4,5]B.Tech scholar, Dept of ECE, Tirumala Engineering College, Narasaraopet, A.P, India
Mail:maheshdro714@gmail.com

Abstract: Electronic voting systems have the potential to improve traditional voting procedures by providing added convenience and flexibility to the voter. Numerous electronic voting schemes have been proposed in the past, but most of them have failed to provide voter authentication in an efficient and transparent way. On the other hand, GSM (Global System for Mobile communications) is the most widely used mobile networking standard. There are more than one billion GSM users worldwide that represent a large user potential, not just for mobile telephony, but also for other mobile applications that exploit the mature GSM infrastructure. In this paper, an electronic voting scheme using GSM mobile technology is presented. By integrating an electronic voting scheme with the GSM infrastructure, we are able to exploit existing GSM authentication mechanisms and provide enhanced voter authentication and mobility while maintaining voter privacy. In this paper, SMS has been used to send message which contain only code or identification of candidate, on the other hand used mobile to receive message and it is connected to a server to collect messages.
Key Words: Electronic voting machine, GSM, SMS based voting, SMS.

1. INTRODUCTION

Election is the act of party casting votes to elect on individual for some type of position. Election may involve a public or private vote depending on the position. Most position in the local, state, and federal governments are voting on in some type of election [1]. E-Electronic voting machine can possibly enhance level of the voting. in the conventional voting system, for example, the electronic voting and paper based voting system is diminishing. presently multi day's a large portion of voters are occupied in his/her work and the majority of the voter are living far from voting focus some voter don't prefer to hold up in lines in this manner because of these voters don't visit to the pooling corner and Percentage of casting a ballot is diminishing. These are principle and genuine disadvantage of customary voting system. presently multi day's some enhancement required in this field, in this paper we are presenting such a framework which dispose of disadvantage of voting system and this new voting system depends on SMS.

Today, the improvement and boundless utilization of data advancements is changing the manner in which individuals see casting voting forms and, eventually, the manner in which they vote. At the bleeding edge of these new innovations is survey webpage direct recording electronic (DRE) voting and remote Internet-based voting system. In vote based social orders, casting a ballot is a critical toll to Collect and mirror individuals' suppositions. Customarily, voting system is led in concentrated or dispersed spots called casting a ballot corners. Voters go to casting a ballot stalls and cast their votes under the supervision of approved equalities. The votes are then tallied physically once the decision has wrapped up [2-3]. With the fast improvement of PC innovation and cryptographic techniques, electronic voting frameworks can be utilized that supplant the wasteful and above all mistake inclined human part. To expand the effectiveness and precision of voting methods, modernized voting system frameworks were created to help collecting and checking the votes.

The voting procedure in the present setting is behind its time in admiration of the use of current ICT as observed by understanding. The voting system starts with people physically setting off to a race office indicating verification address and after that a national identification card (Id) will be issued for getting the validation during the real procedure of voting at the surveying both/station. With this, a voters' rundown will be produced for every body electorate. Every voter will at that point need to go to a surveying station where they trust that their names are made accessible and if so after confirmation with their Id, they will make their choice by putting a detriment for their preferred ideological group image. Sometimes, on the voter's correct thumb/pointer, a permanent ink mark is made to demonstrate that this

individual has just voted thus the voter can't cast a vote once more [4].

After the voting plan is finished, corner authorities will at that point take the voting booths to a brought together spot, at that point announce the voting results by physically checking the votes surveyed, and count the tallies. At times, there might be some requirement for a describe of tally papers surveyed additionally because of inconsistencies. These procedures are frequently long, monotonous, erroneous, and hazardous and sometimes the last tally may get skewed and end up in court cases too. This manual procedure leaves scope for blunders to sneak in, political deceptive nature and political misrepresentation, which is seen through the voicing of their emotions by individuals in the media in numerous nations utilizing these frameworks. In nations that are better created like in India, electronic voting (e-voting) is made conceivable and this procedure embodies both electronic methods for throwing of votes and furthermore checking of votes. This procedure cleared up heaps of issues and boundaries looked by the paper based voting procedure clarified previously. In any case, issues of long waiting lines of voters upon the arrival of casting a ballot to cast their votes still continue and thusly insufficient people desire casting a ballot along these lines dismissing their social liberties [5]. Another explanation behind the absence of investment is that of security and the dread that they might be harassed into voting in favor of somebody that they don't wish to vote and cases have been accounted for in the media with respect to political uproars amid the surveying day. Another essential reason is pantomime, vote by someone before the genuine individual touches base in the surveying stall for vote. These are only a couple of reasons why people might be hesitant to practice their rights to vote on the surveying date. In light of every one of these issues, we here propose a novel Mobile voting system for Jamaica at the main occasion, with the expectation that this Biometric based innovation will eradicate the above issues. Our detailed research centers around the use of portable innovation with the utilization of short message send SMS.

2. LITERATURE SURVEY

The E-Poll (Electronic Polling System for Remote Voting Operations) explores broadband versatile correspondences dependent on the standard for furnishing the E-Poll connect with the required transfer speed and security. This makes it conceivable to utilize E-Poll stands anyplace, inside a private, solid and secured system. The voter-acknowledgment framework depends on a creative keen card with an inserted biometric unique finger impression peruser, which performs voter acknowledgment with outright security.

The haval presents a framework for solid electronic voting which does not rely upon continuous system associations between surveying stall and the vote-counting server. They fabricate the framework on a separated (or, all the more precisely, an irregularly associated) condition, which acts well without system availability. "Security Criteria for Electronic Voting" thinks about some essential criteria for secrecy, uprightness, accessibility, dependability, and affirmation for PC frameworks associated with electronic casting a ballot. After an appraisal of the feasibility of those criteria, it presumes that, operationally, huge numbers of the criteria are innately unsatisfiable with any significant affirmation.

Rubin recognizes the new dangers achieved by presenting the condition of-the art innovation into the race procedure, which may not merit taking. The significant security dangers distinguished incorporate those at the voting stage – including malignant payload (assault programs, remote organization and checking toolboxes, and so on.) and conveyance instrument (worms, infections and bugs, dynamic substance downloaded naturally, and so on.) – and the interchanges framework – including (dispersed) disavowal of administration assault, DNS server assault, and so forth. The security issues in social building and in utilizing particular gadgets are likewise distinguished.

Large portions of the general population have managed online business tasks. This is as of now a piece of regular daily existence. Be that as it may, e-voting isn't in any case a straightforward strategy for vote. The development of electronic voting framework is a standout amongst the most difficult security-basic errands, in light of the prerequisite for distinguishing an exchange off between evidently clashing wellbeing necessities like protection versus review capacity. In this manner it is hard to receive conventional strategies for web based business. For instance, in electronic business there is dependably likelihood to talk with respect to the substance of tasks. Purchasers acquire receipts to demonstrate their inclusion in exchanges. E-voters, thusly, must not acquire any receipts, since this would approve voters to advance their votes.

Estonia starts the undertaking of electronic voting system. The principle center was to apply electronic voting in the races of the nearby government get together in the year 2005. In multi month of January, a group of American security specialists unveiled the security report of Secure Electronic Registration and Voting Experiment. The Secure Electronic

Registration and Voting Experiment (SERVE) framework was intended for organization in essential and regular races and enables the certified voters to vote electronically with the assistance of web. In the wake of examining the security of SERVE, the clump of security specialists suggested that the SERVE ought to be shut. They likewise reported that they don't believe that contrastingly comprised activities could be more secure than the SERVE. Their decision was that the genuine issues to achievement in electronic casting a ballot are not abilities, assets, and so forth; the reality given the present Internet and PC security innovation, electronic voting is a basically Impossible undertaking. This negating circumstance was the principle initiator of this work. By closer view, both security reports are predictable and contain honest and persuading contentions. One of the primary purposes behind two very surprising outcomes was the absence of brought together security investigation in the two reports. A portion of the contentions were very enthusiastic, being founded on specialists' emotional suppositions and "basic modules".

In information technology, biometrics mention to technologies that compute and examine human body features, as fingerprints, eye retinas and irises, voice patterns, face patterns and hand menstruation, for authentication processes. Authentication by biometric confirmation is growing common in collective and general security systems, customer electronics and point of sale applications. In security, the driving force behind biometric confirmation has been satisfaction. This biometrics is the science and technology of computing and examines the biological data of a person. An authentic and precise identification/verification technique may be designed using biometric technologies. Biometric authentication employs unique combinations of tangible physical features- fingerprint, facial features, iris voice, hand geometry and vein patterns.

3. RELATED WORK

Biometric systems are widely used technology for identification and verification purpose by pattern matching. Identification means to find a match between the input pattern and the one which is already stored in data base. For example in biometric attendance system, when a student applies his/ her finger on the biometric device for scanning, a newly generated pattern compared with the stored templates in data base to find a match. If match is found, then the person will be allowed to pass through that area. Then again confirmation implies the way toward checking whether an information design has a place with the asserted personality or not In the ongoing years, casting a ballot supplies which were broadly embraced might be separated into five types:

(a) Paper-based voting: The voter gets a clear ticket and utilizes a pen or a marker to demonstrate he need to vote in favor of which competitor. Hand tallied votes is a period and work expending process, however it is anything but difficult to fabricate paper tallies and the tickets can be held for confirming, this sort is as yet the most widely recognized approach vote.

(b) Lever voting machine: Switch machine is impossible to miss gear, and each switch is relegated for a comparing applicant. The voter pulls the switch to survey for his most loved competitor. This sort of vote machine can check up the tickets consequently. Since its interface isn't easy to use enough, giving some preparation to voters is important.

(c) Direct recording electronic voting machine: This sort, which is curtailed to DRE, incorporates with console, touch screen, or catches for the voter press to survey. Some of them lay in voting records and checking the votes is very rapidly. However, the other DRE without continue voting records are questioned about its precision.

(d) Punch card: The voter utilizes metallic gap punch to punch a gap on the clear ticket. It can check vote consequently, but if the voter's puncturing is deficient, the outcome is most likely decided unjustly.

(e) Optical voting machine: After every voter fills a hover relate to their most loved competitor on the clear ticket, this machine chooses the darkest imprint on each poll for the vote at that point processes the all out outcome. This sort of machine tallies up tickets quickly. Be that as it may, if the voter fills over the circle, it will prompt the blunder aftereffect of optical output

Voting system utilizing SMS offer different points of interest over conventional paper-based voting frameworks focal points that expansion national access to majority rule forms and energize investment. E-voting system decrease the materials required for printing and appropriating votes. Web based casting a ballot, specifically, offers better economies of scale in respect than the span of the constituent roll. E-voting system offers expanded comfort to the voter, urges more voters to cast their votes remotely, and improves the probability of support for portable voters. Moreover, it licenses access to more data with respect to voting alternatives.

E-voting is well ordered procedures which limit the quantity of votes. The electronic assembling and checking of tallies lessens the measure of time spent counting vote and conveying. E-voting system can

bolster various dialects, and the adaptable plan permits up-to-the moment vote changes.

4. EXISTED SYSTEM

Electronic Voting Machine is a fundamental electronic machine that is utilized to store the votes instead of vote papers and boxes which were utilized in customary voting framework. It is a straightforward gadget that is worked easily by the surveying officers and the voters. It is a solitary machine with no system association, and no one can hamper with its programming and change the outcome. Remembering the erratic power supply position in numerous territories in the nation, the machines have been made to keep running on the straightforward batteries

Ongoing years, a significant number of nations has embraced E-voting in favor of their official decisions. In this area, four observational precedents are listed as following. America Government of the United States hold decision correspondingly in a few different ways, as it were, each state can pick the appropriate method to hold races freely. Since there are a few discussions about E-casting a ballot, for example, some vote throws were not tallied, or decision framework smashed amid the Election Day. Next Japan embraced E-voting in favor of neighborhood decision in 2002, for example, city hall leader and councilor race.. at the point when the race wrapped up. the E-voting system are voters stressed over the maltreatment in voting, and they can't ensure their vote are recorded accurately. So to maintain a strategic distance from these issues another framework is proposed dependent on GSM which is examined in underneath segment.

5. PROPOSED SYSTEM

The below figure (1) shows the architecture of proposed system. In this system cell phone, GSM, keypad, oscillator, LCD display and 89c51 microcontroller are used. The E-voting system can divide into two parts: SIM card, each user can take from center who can vote per ration card after than can vote by sending sms and the second part it is mobile which connect to server to collect all messages from voter. This arrangement requires a GSM modem (or a cell phone), a SIM card, an information link that can be utilized to associate the GSM modem (or cell phone) to your PC and a SMS door programming. For long haul tasks it is best to utilize an expert GSM modem, for example, a Waveform Fast track, a Siemens or a Multitask modem. For testing purposes any mobile phone will do. The SIM card needs to be placed inside the GSM modem and it will determine the phone number and the SMS cost. When you purchase your SIM card, it is worth to consider choosing a tariff package which offers favorable text message prices. There is a good chance you can find a plan that offers free or very low cast SMS messages.

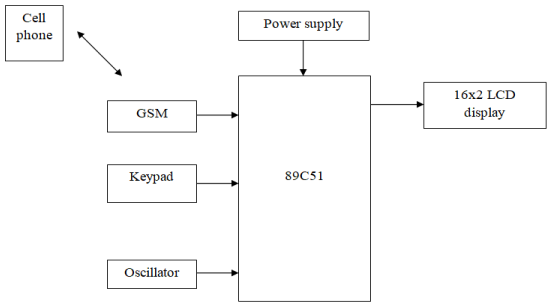

Fig. 1: PROPOSED SYSTEM

SMS server is an application programming which is utilized for accepting messages. It tunes in for approaching messages to arrive, forms the message if it's in a legitimate arrangement. Common port is an object of type GSM Common Main which is required for sending and receiving messages. This event is invoked when a message arrives at the GSM phone. We will register with Message Received Event Handler. At the point when the approaching message arrives, the basic Message Received technique will be summoned which thusly considers the Message Received strategy so as to process the new message. GSM Common article regular has a strategy Read Messages which will be utilized for perusing messages. It acknowledges the accompanying parameters telephone status (All, Received Read, Received Unread, and capacity type: SIM memory or Phone memory.so each voter must receive SIM card from center, it is useless after message where it was sent. The SMS server calculates and counts each millisecond and send data into database. Hence the

proposed system provides no violence polling and full security is obtained.

6. CONCLUSION

E-Voting System Using GSM Mobile SMS is an excellent program to receive SMS messages This is the best solution.The manual voting process can be very tedious, prone to electoral fraud and costly. The time that is been consumed and the resources often times runs into expensive projects. With all this, security is compromised because of the inability of all the human factors to provide efficient security needed for robust operation of the system.

REFERENCES

[1]Prof. Sunitha patil ; Amish Bansal, Utkrash Raina, Vaibhav Pujari, Roshan Kumar, "E-Smart Voting System with Secure Data Identification Using Cryptography", 2018 3rd international conference for convergence in technology.

[2] Andria Rodriguez-perez, "secret suffrage in remote electronic systems", 2017 fourth international conference on edemocracy and eGoernment.

[3] Aranganadhan. N. S, M. DhineshKumar, Praveenkumar. DSanthosh.A, "Embedded System based Voting Machine System using Wireless Technology", International journal of innovative research in electrical instrumentation and control engineering, Vol. 4, Issue 2,2016,pp.127-130

[4] D. Krishna, "Aadhar Based Electronic Voting System and Providing Authentication" International journal of engineering and advanced technology, ISSN:2250- 3676,Vol.4,Issue 2,2015,pp.237-240.

[5] Deepak Rasaily"Jigmee Sherpa, Yashal Dorzee Lepcha, "Design of Electronic Voting Machine using Microcontroller", International Journal of Engineering Trends and Technology, ISSN: 2231,Vol-32 issue 5,2014,pp.277-278.

[6] Deepika, Iswarya, Rathna Prabha, Trini Xavier, "A Survey on E-Voting System Using Arduino Software" International Journal of Advanced Research in Electrical, Electronics and Instrumentation Engineering (An ISO 3297: 2007 Certified Organization) Vol. 5, Issue 2, February 2013, pp.687-690.

[7] Diponkar Paul, Sobuj Kumar Ray, "A Preview on Microcontroller Based Electronic Voting Machine", International Journal of Information and Electronics Engineering, Vol. 3,2012, pp.185-190.

[8] B. Divya Soundarya Sai, M. Sudhakar, "Biometric System Based Electronic Voting Machine Using Arm9 Microcontroller", IOSR Journal of Electronics and Communication Engineering (IOSR-JECE) e-ISSN: 2278- 2834,p- ISSN: 2278-8735.Vol.10, Issue 1,2011, pp.57-65.

[9] Navnath Baban Belote, Sneha Revankar, "Next Generation Electronic Voting Machine", International Journal of Advanced Research in Computer and Communication Engineering Vol. 5, Issue 6,2010,pp.622-624

[10] Mr. Soumen Ghosh, "Development of Microcontroller Based Electronic Voting Machine" IOSR Journal of Electrical and Electronics Engineering ,e-ISSN: 2278- 1676,p-ISSN: 2320-3331, Vol. 9, Issue 2 ,2009,pp.1-3