International Journal of Research in Advent Technology, Special Issue, March 2019
E-ISSN: 2321-9637
International Conference on Technological Emerging Challenges (ICTEC-2019)
Available online at www.ijrat.org

Lora Based Patient Monitoring Through Wearable Devices and Energy Harvesting

A.Gopala Sharma[1], Y.Stalin[2] ,B.Bhavana[3],A.Spandana[4]
Dept. Of Electronics And Communication Engineering , Stanley College Of Engineering And Technology For Women Hyderabad, India
agopalasharma@stanley.edu.in, stalin@yagatek.com, bhavana3096@gmail.com,spandana.athota@gmail.com

Abstract:IOT(Internet of things) is network of devices to able send, receive ,exchange the data through internet providing more interoperability methods. Now a days , IOT plays important role in communication. Both wearable technology and Health communication is the latest trend in the present world.Wearable monitoring devices goes beyond recording and aims to provide intelligent patient monitoring with real-time feedback, in the form of alerts. A wearable wireless monitoring system is designed that records the temperature , humidity, heart rate and blood pressure of a person and these are processed by the micro controller and are transmitted from LoRa Node to LoRa gateway via wireless transmission ,the data obtained at the LoRa gateway is transmitted to monitoring and storing unit in the cloud . In case any abnormal behavior or any vital signs are identified , system will alert concerned doctor and guardians of the person. The data can be accessed anytime promoting the current status of the patient. This system is operated with the power generated from the human body. The power is harvested from the body's heat of the person

Keywords—IOT(Internet of things), LoRa , PIC micro controller, Harvester, Temperature, blood pressure.

1. INTRODUCTION

The Internet of things refers to a type of network to connect anything with the Internet based on stipulated protocols through information sensing equipment's to conduct information exchange and communications in order to achieve smart recognitions, positioning, tracing, monitoring, and administration. The Internet of Things is not a single technology, but it is a mixture of different hardware & software technology. Health monitoring system is an effective way to review health condition of any condition of any individual. It helps to provide monitoring anytime anywhere[1]. Health monitoring is a useful research area where basic routine health parameters can be reviewed anytime by any individual and can also work for the monitoring of heart rate. This operation is convenient for the diagnosis work. Doctors and nurses can monitor the physiological status of each patient in real time through the user management platform[2]. Finally, doctors' work efficiency is improved, and they have more time to serve patients. Once an emergency occurs, it can be properly handled by an alert.

The patient collects physiological signals by carrying a small sensor node and sends it wirelessly to the user management center. In this way, the patient does not need to connect a variety of wires and even can wear a comfortable electronic fabric. Therefore, they can obtain more free space[2]. It provides a good means to access body's state at any point rather than spending time for booking appointments and thereafter waiting for the turn at the doctor's premises. Preloaded information will also save doctor's time as they can review critical cases rather than the routine checkup at clinic[1].

A wearable medical device can be defined as a device autonomous, that is noninvasive, and that performs a specific medical function such as monitoring or support over a prolonged period. The term ''wearable'' implies that the support environment is either the human body or a piece of clothing[3]. Handheld and portable devices are therefore not strictly speaking wearable, but this distinction is not always clear as it also depends on the conditions of their use. Wearable monitoring devices assist in managing the treatment of chronic diseases such as heart diseases, asthma, and diabetes and the monitoring of vital signs such as heart rate, blood pressure, temperature[3]. A wearable device can be connected to any other systems such as computers/ smart phone or another wearable device. Typically, there is a constant interaction and data exchange between the wearable and connected device as the connection exists.

Energy harvesting is the process of energy derived from the external source(e.g. solar, thermal ,wind etc.) .energy harvester provide very small amount of energy for low power devices. Energy can be harvested by three sources. The first one is the energy from the sunlight or artificial light is converted to electrical energy .the second one is the energy can be harvested from the mechanical motion [4]. The third one is energy is harvested from the temperature gradients referred as thermoelectric.

A wearable wireless monitoring system is designed that records the temperature , humidity, heart rate and blood pressure of a person and these are processed by the PIC controller and are transmitted from LoRa Node to LoRa gateway via wireless transmission ,the data obtained at the LoRa gateway is transmitted to monitoring and storing unit in the cloud[5].

2. METHODOLOGY

Health is one of the global challenges for human being.
For designing the above system, the following hardware and software units are required. they are

A. Sensor unit
B. Processing unit

C. Communication device
D. Monitoring and storage unit
E. Tools required

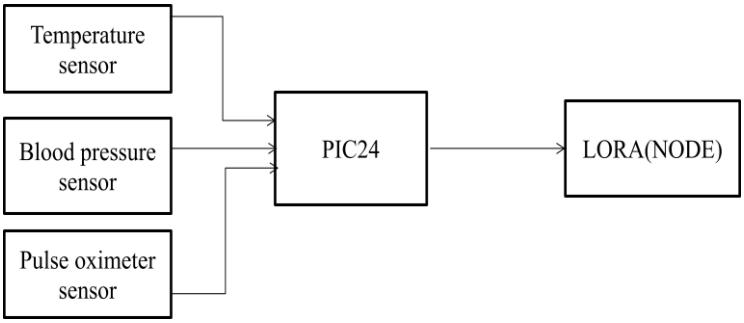

Fig.1 : Block diagram at the transmitter

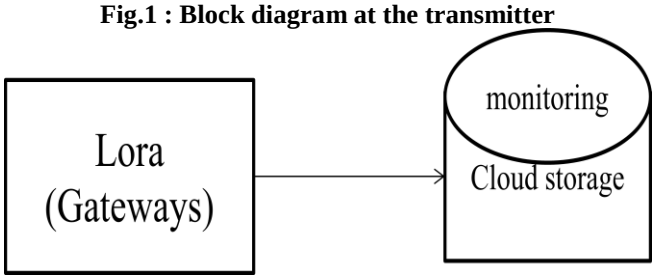

Fig.2 : Block diagram at receiver

A. Sensor Unit:

From the figure 1,the sensors are the first unit to capture and sense the data. A sensor is a device that detects and responds to some type of input from the physical environment. The specific input could be light, heat, motion, moisture, pressure, or any one of a great number of other environmental phenomena. The output is generally a signal that is converted to human-readable display at the sensor location or transmitted electronically over a network for reading or further processing.

The sensor used in this system are

a. Temperature sensor
b. Blood pressure sensor

a. Temperature Sensor:

The temperature sensor which we have used is SHT21 because of its accuracy and low power consumption . Figure 3 specifies the temperature and humidity sensor. The features are low-cost, easy to use, highly accurate, digital temperature sensor, digital humidity sensor, Supply Voltage is 2.1 to 3.6 V, Uses the I2C interface[6]. The resolution of SHT21 can be changed, low battery can be detected and a checksum helps to improve communication reliability. Pins are VDD, VSS, SCL ,SCA. SCA ,SCL are used for communication where as VDD,VSS are the power signals. The temperature and relative humidity are derived from below formulas.

Relative humidity can be calculated using equation (1)

$$\mathbf{RH = -6 = 125 \times \frac{SRH}{2^{16}}} \quad (1)$$

Temperature can be calculated using the below equation (2)

$$\mathbf{T = -46.85 + 175.72 \times \frac{ST}{2^{16}}} \quad (2)$$

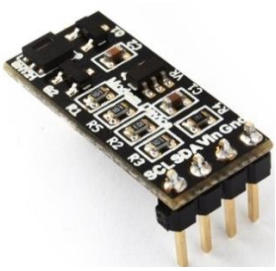

Fig:.3 Temperature sensor

b. Blood Pressure Sensor:

Blood pressure is the pressure of the blood in the arteries as it is pumped around the body by the heart. Blood pressure is recorded as two numbers— the systolic pressure (as the heart beats) over the diastolic pressure (as the heart relaxes between beats). And measures the heartbeat. The features are automatic power saving mode, can read single or all measurements, easy to operate ,liquid crystal display etc. it is connected to microcontroller through UART, the pins are Tx,Rx,VSS,VDD whereas Tx,Rx are used for

communication and VSS,VDD are power pins .the working voltage is +5v . As figure 4 gives the view of blood pressure sensor.

Fig .4: Blood pressure sensor

B. Processing Unit:

The processing unit is used acquisition of data from sensor and processing it and sending to communication device. The processing unit which we used is PIC24FJ64GA306. PIC microcontroller was developed in the year 1993 by microchip technology. PIC stands for Peripheral Interface Controller[7] **.**PIC24F 16-bit Microcontroller featuring nanowatt XLP for extreme Low Power consumption. The power saving modes are Run, deep sleep, RTCC, low voltage sleep, idle, vbat etc. The CPU executes 16MIPS, single instruction per cycle, it has hardware multiplier, divider etc. as shown in the figure 5. The figure 5 states the view of PIC controller **.**The core features are it has 16-bit modified Harvard architecture, 16-bit data and 24-bit address paths etc.

a. I/O Ports In PIC Controller:

All of the device pins (except VDD, VSS, MCLR and OSCI/CLKI) are shared between the peripherals and the parallel I/O ports. All I/O input ports feature Schmitt Trigger (ST) inputs for improved noise immunity.

All port pins have three registers directly associated with their operation as digital I/O's and one register associated with their operation as analog inputs[7]. The Data Direction register (TRISx) determines whether the pin is an input or an output. If the data direction bit is a '1', then the pin is an input. All port pins are defined as inputs after a Reset. it has seven ports A,B,C,D,E,F,G

b. I2C In PIC Controller:

The Inter-Integrated Circuit (I2C) module is a serial interface useful for communicating with other peripheral or microcontroller devices[7]. These peripheral devices may be serial EEPROMs, display drivers, ADC Converters, etc.

The I2C module supports these features Independent master and slave logic ,7-bit and 10-bit device addresses.

c. UART In PIC Controller:

The UART is a full-duplex, asynchronous system that can communicate with peripheral devices, such as personal computers, LIN/J2602, RS-232 and RS-485 interfaces. Full-Duplex, 8 or 9-Bit Data Transmission through the UxTX and UxRX Pins**.** The UART registers are mode register and status and control register.

Fig.5 : PIC controller

C. Communication Device(Lora Technology):

LoRa stands for **Long Range** which is developed by Semtech company in 2012. Semtech LoRa Technology is a two-way wireless RF platform engineered specifically for IoT[8].

There are different frequency bands defined in US (902 to 928 MHz), EU (863 to 870 MHz) , China (779 to 787 MHz) and other regions to be used in LoRa wireless technology-based network. It is low power, long range and low data rate-based technology.

a. Lora Network Architecture:

LoRa network consists of gateways, network servers and end devices. As the figures 6 specifies network structure of LoRa and it gives the brief view of how the nodes and gateways are connected[9]. The network topology is star of stars. End devices are also known as motes and gateways are known as base stations or concentrators in LoRa network system.

End devices and Gateways are connected wirelessly using ISM bands specified with single hop. Gateways and network servers are connected using IP connection.

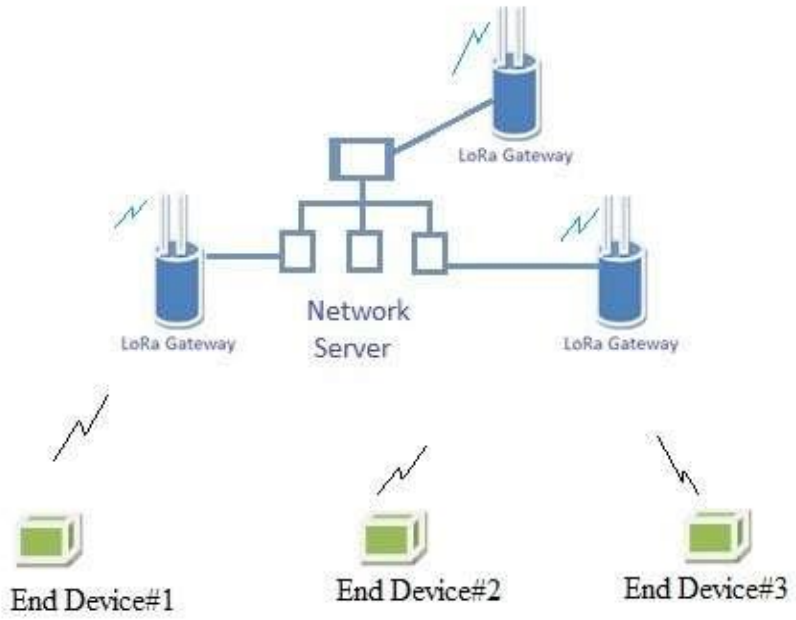

Fig .6 : LoRa network architecture

b. Comparison With Other Technologies:

The difference with other technologies like Bluetooth, Wi-Fi, GSM, Zigbee in terms of parameters like range , cost ,modulation , data rate , Power, frequency etc are shown in the table 1.

Table 1: Comparison with various technologies

PARAMETERS	BLUETOOTH [10]	ZIGBEE [11]	WIFI [12]	GSM[13]	LoRa[14]
MODULATION	Frequency hopping spread spectrum (FHSS)	Direct spread spectrum (DSSS)	DSSS,FHSS	FHSS,DSSS Orthogonal frequency division multiplexing (OFDM)	Chrip Spread spectrum(CSS)
RANGE	10 meters	10-100 meters	100 meters	Kms	0-Kms
DATARATE	3 Mbps	250kbps	54Mbps	10Mbps	0-200Kbps
FREQUENCY	2.4GHz	868MHz,915MHz,2.4Ghz	2.4GHz	900MHz,1800MHz	868MHz,915MHz,433 MHz
POWER	Low	Low	Medium	High	Low
COST	Low	Low	Low	High	Low

c. Chirp Spread Spectrum:

Chrip spread spectrum (CSS) is derived from spread spectrum technique that uses chrip pulses to encode information[15]. A chrip is sweep signal in which frequency increases (up-chrip) Or decreases (down-chrip) with time.

d. Parameters in LoRa:

Data is transmitted in the form of symbol. A symbol consist of one or more bits. based on the symbols, the parameters of the LoRa vary, all the parameters are listed below. they are as follows

i. Bandwidth
ii. Spreading factor
iii. Coding rate
iv. Bit rate
v. Adaptive data rate
vi. Link budget
vii. Receiver sensitivity

i. Bandwidth(BW):

Lora provides 3 scalable bandwidth they are125KHz, 250KHz, 500KHz.

ii. Spreading factor (SF):

The number of bits used to represent the symbol is the spreading factor . so, every symbol has 2^{SF} chips(chips are called values).

3.Coding rate(CR):

The coding rate refers to number of bits that actually carry information

$$\mathbf{CR} = \frac{4}{4+CR} \quad (4)$$

where CR=1,2,3,4.Therfore,CR=4/5,4/6,4/7,4/8 .for example out of 8 bits ,4/5=6.2 bits are data remaining are used for forward error correction[16]. In forwarded error correction ,the redundant bits are added to the data.so these redundant bits are used to restore the data when it is corrupted

Chip rate(R_c):

The number of wave cycles per second

Bandwidth(R_c)=chips/sec. for example bandwidth =125Khz, then chip rate= 125000chips/sec

Symbol rate(R_s):

Number of symbols per second . So R_s can be calculated using the equation (5)

$$\boldsymbol{R_s = \frac{BW}{2^{SF}}} \quad (5)$$

4.Data rate or Bit rate(R_b) :

It is calculated by the following equation (6)

$$\boldsymbol{R_b = SF \times R_s \times CR} \quad (6)$$

Chip duration(T_c):

$$\boldsymbol{T_C = \frac{1}{BW}} \quad (7)$$

Symbol duration(T_s):

$$\boldsymbol{T_S = \frac{2^{SF}}{BW}} \quad (8)$$

5.Link budget *:*

It is the measure of all gains and losses

$$\boldsymbol{Link\ budget = Tx\ power - Receiver\ sensitvity} \quad (9)$$

6.Receiver sensitivity :

Maximum amount of data obtained at receiver with minimum error

Packet formation in LoRa:

Preamble	**Header**	**CRC**	**Payload**	**Payload CRC**
	Explicit mode only			

From the figure 7 ,the first block is preamble Preamble is used for synchronization

Header field consists of payload length ,CRC bits, code rate and FEC bits

Payload ranges from 2 to 255 bytes

e. LM-130H1 Lora Module:

It is developed by Gobalsat company. This module is selected because it has inbuilt Microcontroller to communicate with Lora device and the reason is it is low power consumption and cost[17]. The module is as shown in the figure 7.

Fig.8 LM-130H1

D. Tools Required:

The tools which are used in the system are
MPLAB
PICKIT 3

a. *MPLAB*:

MPLAB IDE is a free, integrated toolset for the development of embedded applications on Microchip's PIC and dsPIC microcontrollers.
It is called an Integrated Development Environment, or IDE, because it provides a single integrated environment to develop code for embedded microcontrollers.
The components of MPLAB are
Project manager
Editor
Debugger
Assembler/linker and language tools
Execution engine

The MPLAB IDE provides the ability to:

i. Create and edit source code using the built-in editor.
ii. Assemble, compile and link source code.
iii. Debug the executable logic by watching program flow with the built-in simulator or in real time with in-circuit emulators or in-circuit debuggers.
iv. Make timing measurements with the simulator or emulator.
v. View variables in Watch windows.
vi. Program firmware into devices with device programmers

b. PICKIT3:

Microchip's PICkit 3 In-Circuit Debugger/Programmer uses in-circuit debugging logic incorporated into each chip with Flash memory to provide a low-cost hardware debugger and programmer[7].
The PICkit3 allows debugging and programming of PIC and dsPIC Flash microcontrollers using the powerful graphical user interface of the MPLAB Integrated Development Environment (IDE).

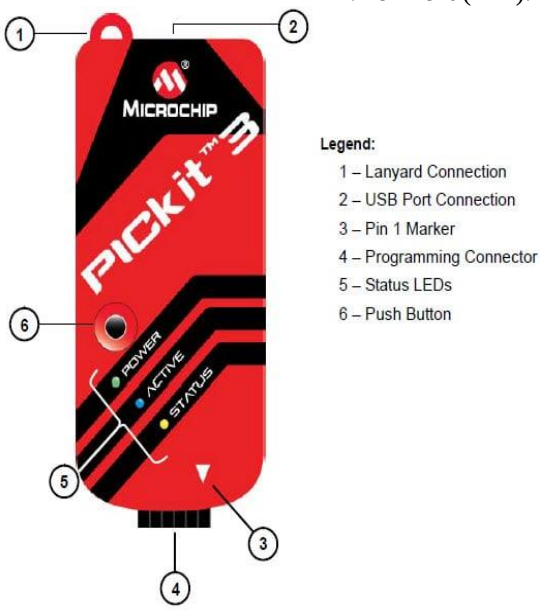

Fig.8 : PICKIT3 programmer

ENERGY HARVESTER:

Fig.9 : Energy harvester

The module which we have used is SP1848 module as shown in the figure 9
If converts the heat energy to electrical energy and that electrical energy can be used boards[18].
Is works on Peltier effect i.e., one side of the body should be hot and other side be cool ,then both the are calculated and difference is converted to electrical energy

3. SYSTEM ARCHITECTURE

A. Working Principle:

At the transmitter side, the inputs are sensors. The sensors are used to sense the data and send it to processing unit. The sensors are temperature sensor, blood pressure sensor, pulse oximeter sensor. The temperature sensor which is used in the system is SHT21.The SHT21sensor is a fully calibrated, low power consumption module which is used to capture the temperature and humidity values and gives digital output and it is interfaced to Pic controller[7] . The blood pressure sensor is used to measure the systolic and diastolic reading and heart rate and this sensors is interfaced through UART.

The data from the sensors need to process. For acquisition of data from the sensors and processing the data and transmitting to the communication device, the controller is required. The controller which we have used is PIC24FJ64GA306 [7].The pic 24f controller is a extreme low power consumption , 16 bit controller and it has 64 pins ,4UARTS etc., and the data from the sensors is captured and sends it communication device. The communication device which is have used is LoRa. LoRa is long range, low power consumption module which acts as end devices and send the data to gateway.

The data obtained at the gateway needs to be trans mitted to the monitoring and storage in the cloud though A5 microcontroller that runs with Linux OS .from the microntroller the data is transmitted through WIFI or LAN or 4G module to webserver and in case any abnormal the micro controller will alert the person through GSM module[12].

B. Flow Chart:

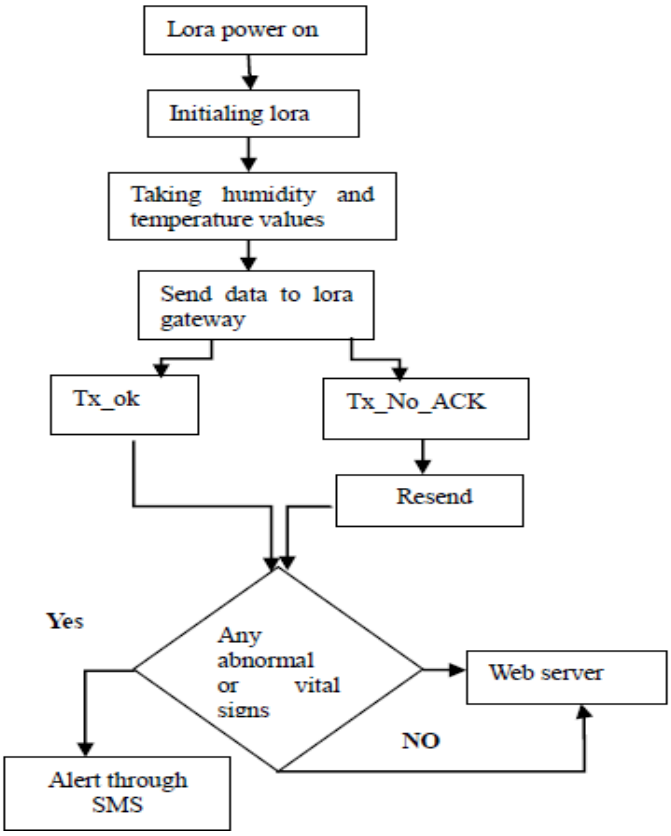

Fig.10: Flow chart

4. EXPERIMENTAL VIEW

Interfaced the temperature sensor with Pic controller and obtained the values from the sensors and are transmitted to LoRa gateways from LoRa node and programming the pic controller through MPLAB tool and debugging through PICkit3 debugger and communicating with LoRa module and passing the data from Lora node to Lora gateway[7][14]. The data observed at the gateway. below are the designs of modules. LoRa node module is the figure 11 and the gateway is in the figure 12, some of the terminal window output are shown in the figure 13 and figure 14

Fig.11: Lora node

The board which is in the figure 12 is configured as Gateway.The gateway can receive the data and sends the acknownledgement to node as the gateway has received the data.

Fig.12 : Lora gateway

Output at the terminal windows

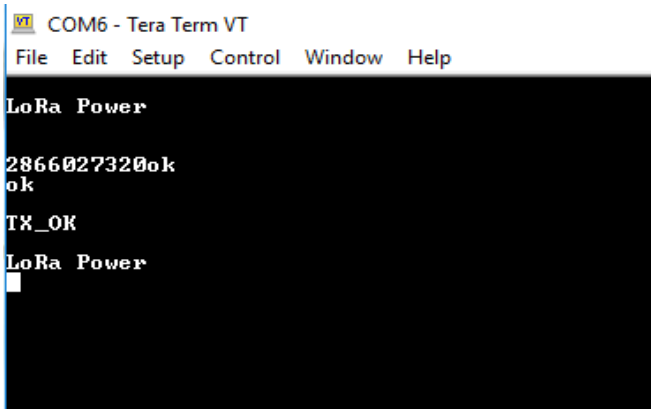

Fig.13: Node Transmission and receiving

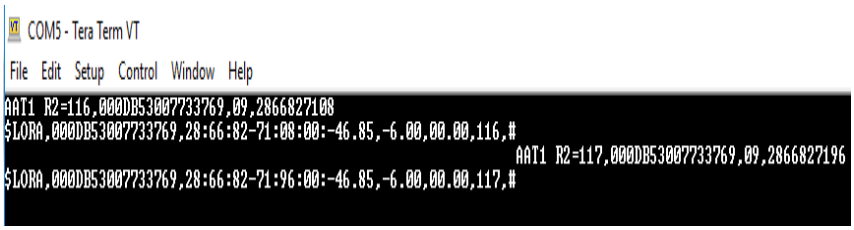

Fig.14 : At Lora gateway

5. RESULTS AND DISCUSSIONS

As we have monitored through wireless devices and energy harvesting based on Lora technology. From the Figure 13 and figure14, we have tested human temperature and humidity using Sht21 sensor and these are transmitted through LoRa wireless transmission. As we have shown in figure 13, the Board is configured as LoRa node and Figure 14 is configured as LoRa gateway. The data which is sent from the gateway to cloud from human body through LoRa node . The data obtained at the gateway is stored in the web server or cloud storage.

6. CONCLUSION

A Wearable device is designed as a Lora node has attached with temperature sensor, blood pressure sensor as to measure the temperature, humidity, Blood pressure and heart rate values. These are processed by PIC controller and transmitted from Node to cloud through Gateway .In case any vital signs in the human body ,the concerned doctor and family member will get an alert in the form of SMS. The system is designed with Low power efficiency because of the Lora module and controller which we chosen are Low power consumption modules. This system no need get the power from the external sources as it consists of energy harvester. The energy harvester is used to get power from human body .This paper concludes with the system with low power effiency and low cost with low range technology .

REFERENCES

[1] N. Gupta, H. Saeed, S. Jha, M. Chahande, and S. Pandey, “Iot based health monitoring systems,” Proc. 2017 Int. Conf. Innov. Information, Embed. Commun. Syst. ICIIECS 2017, vol. 2018–January, pp. 1–6, 2018.
[2] W. Zhang, M. Kumar, J. Yu, and J. Yang, “Medical long-distance monitoring system based on internet of things,” Eurasip J. Wirel. Commun. Netw., vol. 2018, no. 1, 2018.
[3] J. Lucy, “The Internet of Things and You,” Electr. Wholes., vol. 95, no. 10, p. 3–n/a, 2014.
[4] D. Weinswig, “the Wearables Report 2016,” Fung Glob. Retail Technol., pp. 1–26, 2016.
[5] Digital Transformation Monitor, “Energy harvesting to

power the rise of the Internet of Things Energy harvesting to power the rise of the Internet of Things," no. July, 2017.

[6] A. Kulkarni and C. Science, "Low Drift , Wireless Temperature Sensor for Harsh Industrial Applications," no. September, pp. 3986–3991, 2015.

[7] B. Eric, "Remote Health Monitoring System," vol. 1, no. 12, pp. 209–214, 2001.

[8] U. Noreen, E. Ahcenebounceuruniv-brestfr, and L. Clavier, "A Study of LoRa Low Power and Wide Area Network Technology," 2017.

[9] T. Thomas, "LoRa, LoRaWAN, and the challenges of long-range networking in shared spectrum," no. december, pp. 1–10, 2015.

[10] Apple, "Working With Bluetooth Devices," Organization, 2004.

[11] I. Journal and O. F. Engineering, "International journal of engineering sciences & research technology zigbee and gsm based patient health monitoring system," vol. 5, no. 9, pp. 445–451, 2016.

[12] S. Chakole, R. R. Jibhkate, and A. V Choudhari, "A HEALTHCARE MONITORING SYSTEM USING WIFI MODULE," 2017.

[13] H. B. Patil and M. Umale, "Arduino Based Wireless Biomedical Parameter Monitoring System Using Zigbee," Int. J. Eng. Trends Technol., vol. 28, no. 7, pp. 316–320, 2015.

[14] E. Pietrosemoli, "LoRa details."

[15] A. Lavric and V. Popa, "A LoRaWAN: Long Range Wide Area Networks study," 2017 11th Int. Conf. Electromechanical Power Syst. SIELMEN 2017 - Proc., vol. 2017–January, pp. 417–420, 2017.

[16] P. N. P. R. Lpwan-vpn and C. Vallélian, "LoRa White Paper," pp. 1–8, 2018.

[17] T. M. Workgroup, "A technical overview of LoRa and LoRaWAN," no. November, pp. 1–20, 2015.

[18] A. Karthi, R. Rajendran, and P. Mathiarasan, "Smart health surveillance with automated database using android mobile device," Brazilian Arch. Biol. Technol., vol. 60, no. December, pp. 1–14, 2017.

[19] http://www.rfwireless-world.com/Terminology/LoRa-vs-Zigbee.html
https://www.ceva-dsp.com/ourblog/game-of-iot-communication-protocols-lora-sigfox-nb-iot-wi-fi-will-there-be-a-sole-ruler/
https://www.digikey.in/en/articles/techzone/2017/oct/comparing-low-power-wireless-technologies
https://flespi.com/blog/top-7-technologies-for-iot-connectivity-2017
https://randomnerdtutorials.com/esp32-lora-rfm95-transceiver-arduino-ide/

[20] https://www.link-labs.com/lora

[21] https://www.microchip.com/design-centers/wireless-connectivity/low-power-wide-area-networks/lora-technology

[22] https://www.semtech.com/products/wireless-rf/lora-transceivers

[23] https://www.microchip.com/mplab/mplab-x-ide

[24] http://ww1.microchip.com/downloads/en/DeviceDoc/30009996g.pdf

[25] https://www.globalsat.com.tw/en/product-249451/Dual-mode-RF-Module-for-LoRa%C2%AE-Technology-LoRaWAN%E2%84%A2-Certified-LM-130H1.html