*International Journal of Research in Advent Technology, Special Issue, March 2019*
*E-ISSN: 2321-9637*
*International Conference on Technological Emerging Challenges (ICTEC-2019)*
*Available online at www.ijrat.org*

# UPQC Based Two - Bus System Harmonic Analysis Comparison With UPFC

G V Prasanna Anjaneyulu[1], R. Hothri[2], Sk. Abdul Kalam[3] ,Sk. Johny Begam[4]
*[1,3]Assoc. Prof. EEE Department, [2,4]Asst. Prof. EEE Department*
*Tirumala Engineering College, Narasaraopet, A.P*
*anji.nitc143@gmail.com, hothri.ravikindi@gmail.com, eeetec.2012@gmail.com, janieee.215@gmail.com*

**Abstract:**The conventional AC electric power systems are designed to operate with sinusoidal voltages and currents. However, nonlinear loads and electronically switched loads will distort steady state AC voltage and current waveforms. Periodically distorted waveforms can be studied by examining the harmonic components of the wave-forms. This paper deals with the comparison of performance of basic UPFC and UPQC systems. The comparison is done by assuming and similar values of load impedance and sending end voltage. The comparison is done in terms voltage THD content**.**

**Keywords**— UPFC, UPQC, Total Harmonic Distrortion (THD).

## 1. INTRODUCTION

The demand of efficient and high quality power is escalating in the world of electricity. Today's power systems are highly complex and require suitable design of new effective and reliable devices in deregulated electric power industry for flexible power flow control. In the late 1980s, the Electric Power Research Institute (EPRI) introduces a new approach to solve the problem of designing, controlling and operating power systems: the proposed concept is known as Flexible AC Transmission Systems (FACTS) [1]. It is reckoned conceptually a target for long term development to offer new opportunities for controlling power in addition to enhance the capacity of present as well as new lines [2] in the coming decades. Its main objectives are to increase power transmission capability, voltage control, voltage stability enhancement and power system stability improvement. Its first concept was introduced by N.G.Hingorani in April 19, 1988. Since then different kind of FACTS controllers have been recommended. FACTS controllers are based on voltage source converters and includes devices such as Static Var Compensators (SVCs), static Synchronous Compensators (STATCOMs), Thyristor Controlled Series Compensators (TCSCs), Static Synchronous Series Compensators (SSSCs) and Unified Power Flow Controllers (UPFCs), Unified Power Quality conditioners (UPQCs).

## 2. CONVENTIONAL SYSTEM – UPFC

Block diagram of Unified Power Flow Controller (UPFC) system is shown in Fig.1. UPFC is an electrical device for providing fast acting reactive power compensation on high voltage electricity transmission networks. It uses a pair of three phase controllable bridges to produce current that is injected into a transmission line using a series transformer. The controller can control active and reactive power flows in a transmission line. The UPFC uses solid state devices, which provide functional flexibility, generally not attainable by conventional thyristor controlled systems. The UPFC is a combination of a static synchronous compensator (STATCOM) and a static synchronous series compensator (SSSC) coupled via a common DC voltage link.

The main advantage of the UPFC is to control the active and reactive power flows in the transmission line. If there are any disturbances or faults in the source side, the UPFC does not work. The UPFC operates only under balanced sine wave source. The controllable parameters of the UPFC are reactance in the line, phase angle and voltage. A large battery is used to charge the capacitor of STATCOM. The UPFC is a combination of STATCOM and SSSC.

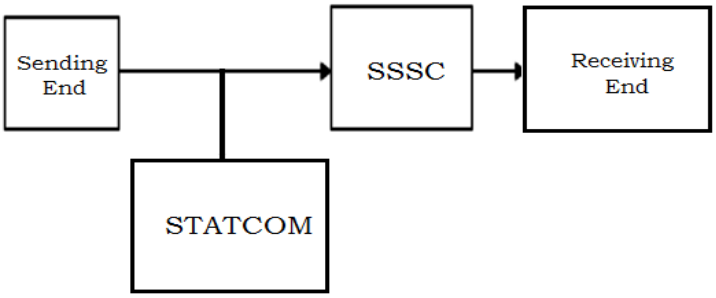


**Fig.1. Basic Structure of UPFC**

The STATCOM supplies part of reactive power required by line and load. The SSSC injects a voltage to compensate the voltage drop in the line.

## 3. PROPOSED SYSTEM - UPQC

The block diagram of proposed UPQC system is shown in Fig.2. The Active Filter at the sending end supplies harmonics required by the nonlinear load. DVR injects voltage to improve the receiving end voltage.

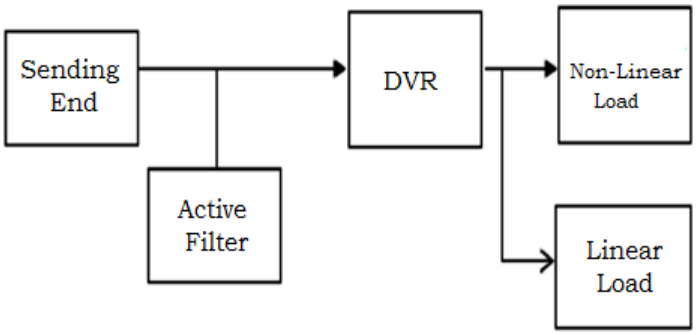


**Fig.2. Basic Proposed Structure of UPQC**

**Design of UPQC System**

Design is done by obtaining the values of $V_1$, $I_1$ and frequency of MOSFET. Based on required capacitor voltage, the duty ratio is calculated using the equation

$$V_0 = \frac{V_1}{(1-a)} \quad (3.1)$$

Efficiency of the converter to calculate the output current is

$$\eta = \frac{V_a I_a}{V_1 I_a} \quad (3.2)$$

## 4. IMPLEMENTAION

### *A. UPFC Implementation*

The basic simulation diagram of UPFC system is shown in Fig.3. Generator at the Sending end is represented as a series combination of R, L and E. Line impedance is divided into two parts. The loads at the receiving end are represented as combination of R and L.

### *B. UPQC Implementation*

The basic simulation diagram of proposed UPQC System is shown in Fig.4. The UPQC is represented as a sub system. Line impedance is split into two parts. The output voltage of UPQC is injected in the middle of the line. Voltage and Current measurement blocks are connected at the receiving end to measure receiving end voltage and current. P - Q block is connected to measure real and reactive powers.

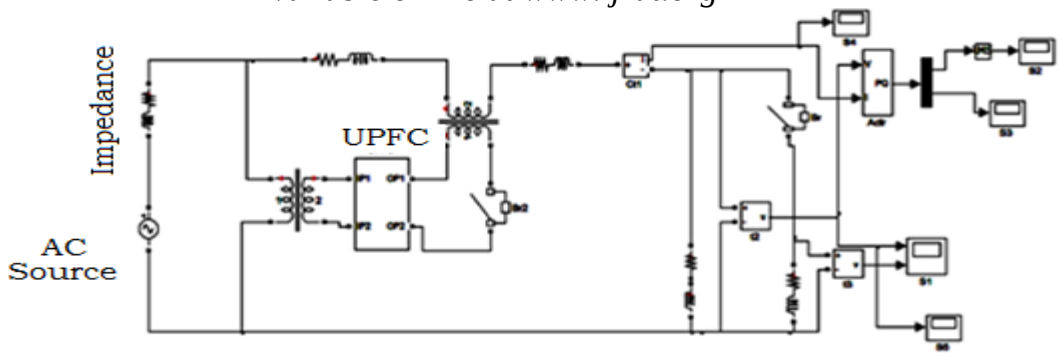


**Fig.3. Simulation diagram of UPFC**

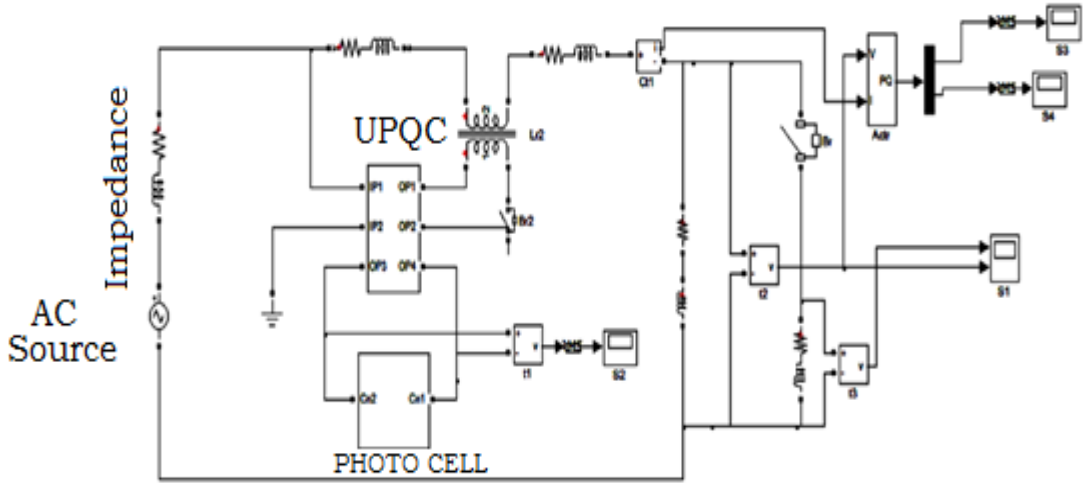


**Fig.4. Simulation diagram of Proposed UPQC**

## 5. SIMULATION RESULTS

Basic UPFC system is simulated by MATLAB/SIMULINK Tool. The simulation results of basic UPFC system are analyzed. The THD content for receiving end voltage is shown in Fig.5 and THD content is 8.86%. Basic UPQC system is simulated by MATLAB/SIMULINK Tool. The simulation results of basic UPQC system are analyzed. The THD content for receiving end voltage is shown in Fig.6 and THD content is 3.63%.

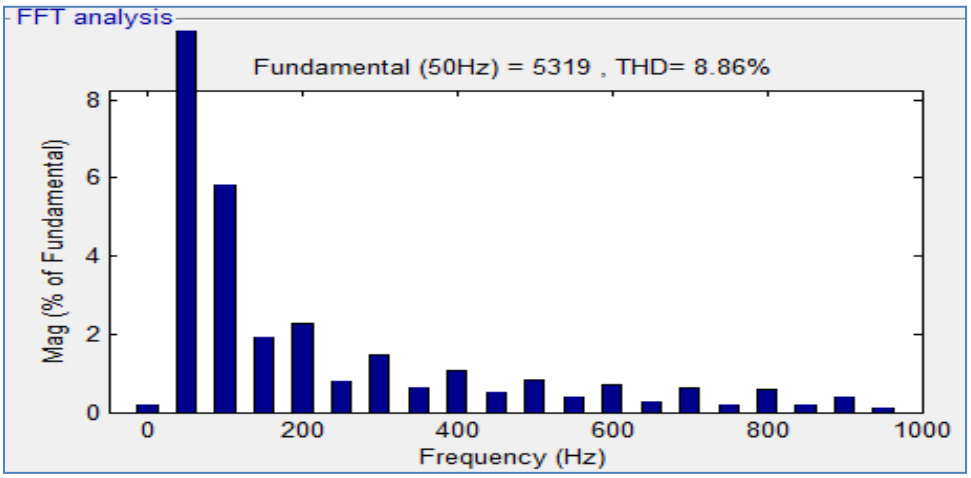


**Fig.5. THD content for Receiving End Voltage of UPFC**

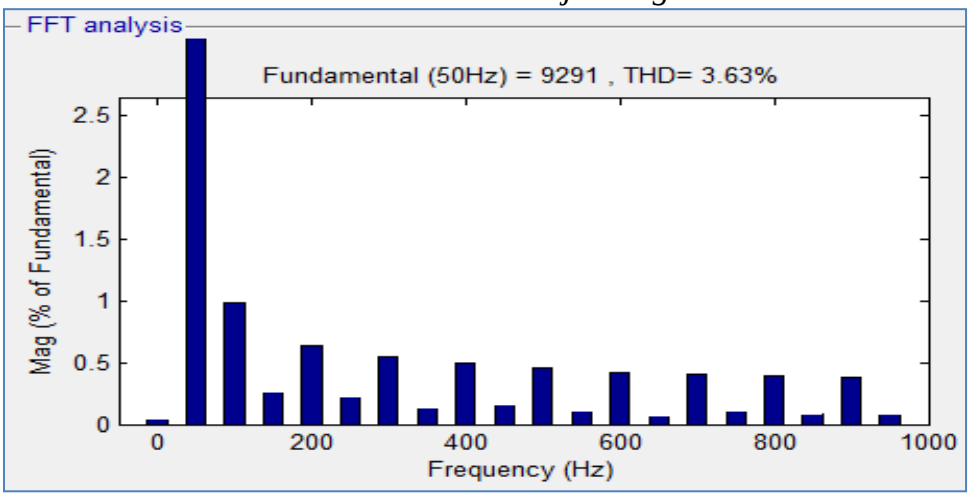


**Fig.6.THD content for Receiving End Voltage of UPQC**

## 6. CONCLUSIONS

Basic UPFC and UPQC systems are compared and the results are presented. The Receiving End Voltage THD content decreases by 5.23% by replacing UPFC with UPQC. The simulation results indicate that the performance of two bus systems with UPQC is better than of UPFC system.

## REFERENCES

[1] B. Singh, K. Al-Haddad, and A. Chandra, "A review of active power filters for power quality improvement," *IEEE Trans. Ind. Electron.*, vol. 45, no. 5, pp. 960–971, Oct. 1999.

[2] V. Khadkikar, "Enhancing electrical power quality using UPQC: Acomprehensive overview," *IEEE Trans. Power Electron.*, vol. 27, no. 5, pp. 2284–2297, May 2012.

[3] W. C. Lee, D.M. Lee, and T. K. Lee, "New control scheme for a unified power-quality compensator-Q with minimum active power injection," *IEEE Trans. Power Del.*, vol. 25, no. 2, pp. 1068–1076, Apr. 2010.

[4] M. Yun, W. Lee, I. Suh, and D. Hyun, "A new control scheme of unified power quality compensator-Q with minimum power injection," in *Proc. IEEE 30th Annu. Ind. Electron. Soc. Conf.*, Nov. 2–6, 2004, pp. 51–56.

[5] V. Khadkikar and A. Chandra, "UPQC-S: a novel concept of simultaneous voltage sag/swell and load reactive power compensations utilizing series inverter of UPQC," *IEEE Trans. Power Electron.*, vol. 26, no. 9, pp. 2414–2425, Sep. 2011.

[6] V. Khadkikar and A. Chandra, "A new control philosophy for a unified power quality conditioner (UPQC) to coordinate load-reactive power demand between shunt and series inverters," *IEEE Trans. Power Del.*, vol. 23, no. 4, pp. 2522–2534, Oct. 2008.