International Journal of Research in Advent Technology (IJRAT) Special Issue
E-ISSN: 2321-9637
Available online at www.ijrat.org
*International Conference "*INTELINC 18*", 12th & 13th October 2018*

Design and Development of Real-Time Monitoring System Using GSM for Epilepsy Patients

Sakthivel Sankaran [1], Vinothkumar Kannan [2], Hariharasudan Gowrisankar [3], Sandhiya Manivannan [4]
Assistant Professor, Department of Biomedical Engineering, Kalasalingam Academy of Research and Education.
[2 3 4] Final Year Biomedical Engineering, Department of Biomedical Engineering,
Kalasalingam Academy of Research and Education.
Email Id - *[1] sakthivelsankaran92@gmail.com, [2] vinothkumaran97@gmail.com, [3]hariharasudan04@gmail.com, [4] sandhiyamanivannan1997@gmail.com*

Abstract- Epilepsy is the condition that causes repeated bursts of electrical activity in the brain which affects millions of people all over the world. According to a statistical observation in the year 1991 from 99 to 1,710 days, the number of observed seizures ranges from 18 to over 400, with daily seizure rates of 0.1-4.3 per day. There is an existing product which detects the seizures and sends the signals via Bluetooth device and wifi , but this seems to be more complicated while they are not in their range. So that the alerts cannot be sent properly to the caretaker and the doctor who were at a long distance. In order to overcome this problem, this work deals with the GSM unit and microprocessor instead of using the Bluetooth, this is capable of sending the alert to the doctor at a long distance. To reduce the risk of being affected by the seizures, this work aims to develop a product which is capable of detecting the seizures by using the real time EEG (Electroencephalogram) signals using a head mounted EEG recording system and also by using this system the doctor can get to know the location of the subject as well. The main advantage of this idea is that there is no need of a person to intimate that they are being affected by the seizures and also the transmission of the alert is fast, accurate and reliable. By this system the caretaker can easily access the subject and can aid them.

Keywords: Seizures, GSM, EEG, Microprocessors

1. INTRODUCTION

Epilepsy is a disorder in which nerve cell activity in the brain is disturbed, causing seizures. A key diagnostic tool for epilepsy is EEG, a test that measures the voltage fluctuation along the scalp from ionic current due to the neuronal activity. More than 1 million cases in India per year, uses the National Health Interview Survey (NHIS), a random sample of adults in the U.S. during 2013 and 2015 were surveyed about their epilepsy and other issues. According to their survey 1.2% of the U.S. population or 3 million adults have active epilepsy in 2015. If you add children, the number reaches 3.4 million each year. This has increased from 2.3 million adults with active epilepsy in 2010. The existing product does not cover the huge range of distance as it uses only the wifi network. To resolve this issue of the existing system, REMS (Real-time Epileptic Monitor) deals with GSM (Global System for Mobile communication) network to cover a large distance to alert the caretaker. GSM is a digital telephone system used across Europe and in other parts of the world to describe the protocol for the second generation, digital cellular networks used by the mobile devices. Thus the alert can be sent as a message to the caretaker easily. REMS will alert the caretaker at the onset of the seizure, record and store EEG recordings. The design of REMS consist of a cap with electrodes designed in such a way that the electrode can be easily fixed at the correct position in the head for the real-time analysis of the EEG signals.

Fig1. Design of the cap

2. LITERATURE SURVEY

[1]In this paper, detection of epilepsy is based on both signal and image processing has received along with the comparison of performance. Mainly in this paper early detection and diagnosis of epileptic seizures by signal or image processing techniques. In image processing techniques are such as histogram model, transforms, and clustering partial different equations. In this detection for epileptic seizures using 10-20 electrode system, only 19 electrodes were used in this work. It minimizes the identification faults with the combination of EEG, MEG signal with CT, FMRI, MRI.

[2]In this paper we proposed an epilepsy seizures detecting method that is implemented in a hardware device to help epileptic patient. In this paper Chebyshev filter is used to pre-process the signal using the wavelet analysis and decompose the filtered the signal into five sub bands in both time and frequency domain and this hardware alerts the care take of the epileptic patients.[3]In this paper, the support vector machines (SVMS) adopted to distinguish between normal and epileptic EEG. In the 10-20 lead system, the electrode placement will be in the indices of F3, C3, P3, O1. The normal and epileptic EEG signal is calculated by CaO's method and automatically sends the signal of the epileptic patients to the care taker.[4] In this paper for phase congruency to detect the epileptic seizures. Number of spikes in the interval for the epilepsy. Result will be magnitude based displayed.[5]Here we use 8-channel active electrode system for EEG monitoring. In this system they are not using the gel instead they use the electrodes directly for bio potential EEG signal acquisition. The proposed system mainly consist of eight frontend active electrode based on eight chopper instrumentation amplifier.

3. METHODOLOGY

3.1 BLOCK DIAGRAM

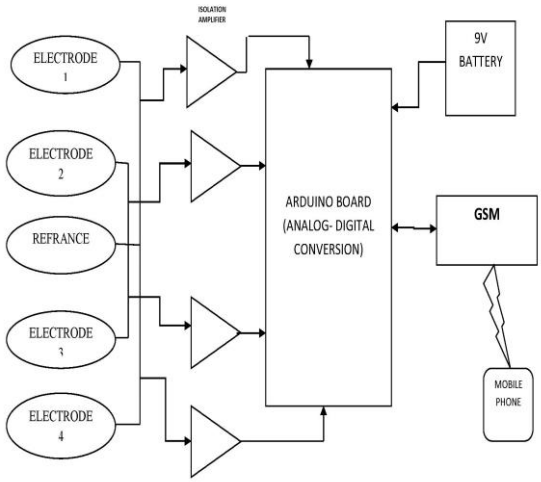

3.2 DETECTION TECHNIQUES

The electrical activity in the brain can be determined by using the four frequencies which are as follows,
Delta- 0-4 HZ, Theta- 4-8HZ, Alpha – 8-13 HZ and Beta- 13-30HZ. These frequencies can be separated by the band pass filter. Using these four frequency bands the epilepsy can be detected. The algorithms of these bands are used to detect the brain activities.

3.3. FREQUENCY DOMAIN FEATURES.

The band width is the most important feature in the detection of the EEG signal which is mostly used for emotion recognition in the cases of coma. So that it is believed that it can also be helpful in the detection of the epilepsy. Frequency domain analysis replaces the measured signal with a group of sinusoids which, when added together, produce a waveform to equilent. Sinisolid are examine to amplitude, frequencies, phases.

The features extracted from the signal in the peak frequency, peak frequency magnitude, signal power Delta, Theta, Alpha, Beta, Gamma, mean band power, mean phase angle.

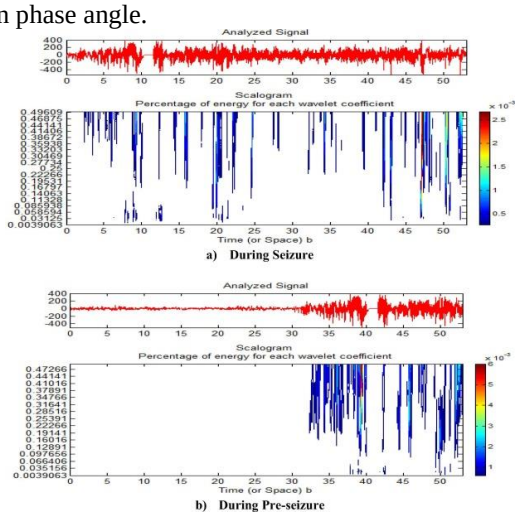

Fig2. Frequency domain

3. 4 ELECTRODES

The electrodes are used to detect the electrical motion of the neural activity. For epilepsy the frequency ranges from 0.1hz to 100hz and the amplitude ranges from 10 to 100μv^2. The electrodes will be placed at the scalp of the head to detect the accurate signals of the brain. Thus for the detection of the epilepsy the electrodes are placed at the human head in T7,C3,CZ,C4,T8. In CZ is measure the distance from pre- auricular point to pre- auricular point. It is midpoint of brain.

Fig.3. Gold plate electrode

The REMS uses reusable electrodes so the user need not worry about its damage. It uses wet electrodes because they are more commercially available. REMS will use gold plated silver electrodes similar to the cap. But the REMS uses a cap which is fitted with the same electrode which is reusable so that it will be easy for the patient to wear.

3.5. CAP DESIGN

The cap is design is a usual cap fitted with the electrodes. The power source to the electrode is fitted in the belt of the person so that it will be easy to carry them. The cap is designed to support the electrodes to house in and the cap is a elastic one and can be adjusted, so that it can be varied accordingly to the subject. The cap is chosen to be a usual cap because this usual cap is very much convenient to that of other caps and this will not make the subject to feel as a patient. This cap looks like a cap similar to the normal caps so that others cannot find it odd when the goes outside. This make the patient feel comfortable.

3.6. SIGNAL PROCESSING

The role of signal processing in REMS is to amplify EEG signal from micro volts to milli volts. It also removes the unwanted frequencies. It sends the detected characteristic signals via GSM to the caretaker. The circuit use a non-inverting op amp level shifter that allows only positive voltage to arduino during analog to digital conversion. The filter is designed in a way that cuts the frequency which is greater than 25HZ the sampling rate is 125 HZ . the GSM module is attached to the microcontroller that transmits data between the arduino board and android phone.

3.7. MICROCONTROLLER

This system uses the arduino pro mini which is based on the ATmega 328. This board uses the power supply of 3.3v to 12 volt and the circuit operating voltage will be around 3.3v to 5v depending upon the working module. This has a flash memory of 32KB so compared to the old version boards this has a huge memory. The clock speed is 8Mhz so it can perform faster than the old processors. The specifications of the board is quite comfortable and it is in the required level for us to do this work. It is also supports serial communications.

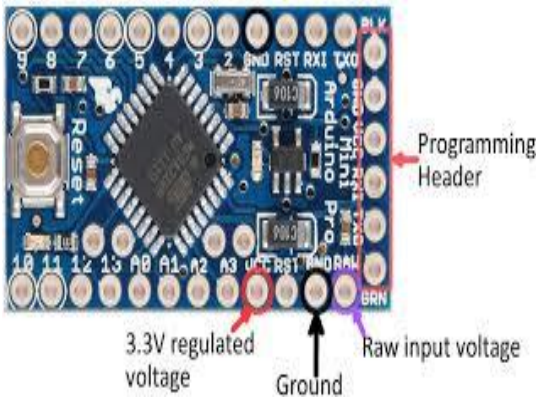

Fig.4. ATMEGA328

3.8 GSM (Global System for Mobile communication)

GSM means Global System for Mobile communication. Now a days GSM is used by millions of people around the world. GSM consist of three sections and they are mobile stations, base subsystem, network subsystem. The base subsystem consist of Base transceiver systems and Base station controllers. The network subsystem consist of Home location register, visitor location register, equipment identify register, authentication centre. The first step of the GSM is acquiring the signal from the mobile station and these signals are transmitted to the base sub system and then reaches the network sub system. and finally these signals enters into the devices like PSTN, ISDN, etc..,

Fig.5. GSM module

GSM comprises of TDMA and FDMA and frequency hopping. The major advantage of GSM is that it has a widespread usage throughout the world. Even though there is a difference in the frequency between

countries, GSM could transfer the data between them. The ban

dwidth in GSM is small so that when there is multiple users in the same band can slowdown the process of the GSM. This is a drawback of the GSM unit even if it has this disadvantage, we are not considering this as a problem for the transfer of the data of the epileptic patients in a different band width. So this is not going to be a big issue or lag in the transfer of data.

3..9 ISLOTATION AMPLIFIER

Isolation amplifier provides electrical isolation and electrical safety barrier. It is also called as unity gain amplifier. It is used to amplify the low level signals. The isolation amplifier protects the patients from the leakage current. The input and the output is electrically isolated and so it is called as the isolation amplifier. This amplifier not only amplifies the input but also gives the same output voltage level compared to the input voltage.

4. CONCLUSION AND FUTURE WORK

The REALTIME EPILEPSY MONITORING SYSTEM uses the GSM for epileptic patients with efficiency, cost and ease of use in mind. The comfort for the user is the major advantage and the battery life lasts longer. It will characterize the signal as epileptic and non epileptic. The epileptic patients communicate to the doctors via mobile phone. The EEG is an integrated, displayed in the android phone. The future aspect is, it can be added with the storage of last occurrence of epilepsy so that the doctor can easily treat the patient.

REFERENCES

[1] Diagnosis of epilepsy- a systematic review (vetrikani.r, t.christy bobby-2017).

[2] Epilepsy seizure detection using EEG signals (zakareya lasefr, sai shiva vnr ayyalasomayajula, khaled elleithy-2017).

[3] Detection of epileptic seizure based on EEG signals (ye yuan -2010).

[4] Epileptic seizure detection in EEG recording using phase congruency (yodchanan wongsawat-2008).

[5] Diagnosis of epilepsy- a systematic review (vetrikani.r, t.christy bobby-2017).

[6] A 160 µ w -8 channel active electrode system for EEG monitoring (jiawei xc, refet firat yazicioglu, member IEEE -2011) .

[7] Epilepsy seizure detection using EEG signals (zakareya lasefr, sai shiva vnr ayyalasomayajula, khaled elleithy-2017).

[8] Detection of epileptic seizure based on EEG signals (ye yuan -2010).

[9] Epileptic seizure detection in EEG recording using phase congruency (yodchanan wongsawat-2008).

[10] A 160 µ w -8 channel active electrode system for EEG monitoring (jiawei xc, refet firat yazicioglu, member ieee -2011).

[11] McCracken, Harry. "Who's Winning, IOS or Android? All the Numbers, All in One Place | TIME.com." *Technologizer*. Time Tech, 16 Apr. 2013. Web. 24 Nov. 2013.

[12] Chi YM, Wang YT, Wang Y, Maiser C, Jung TP, Cauwenberghs G: Dry and noncontact EEG sensors for mobile brain - computer interfaces.IEEE Trans Neural Syst Rehabil Eng 2012;20:228-235.

[13] Matthews R,Turner PJ, McDonald NJ, Ermolaev K, Manus T, Shelby RA, Steindorf M: Real time wokload EEG system using hybrid EEG electrodes .Conf proc IEEE Eng Med Biol Soc 2008;2008:5871-5875.

[14] Center for Disease Control and Prevention.*http://www.cdc.gov/epilepsy/basics/faqs.htm.*

[15] Myer MH, Kozmo R:Modelling Brain Electrical Activity Invoting Vagus Nerve Stimulation. St. Louis, Intelligent Engineering Systems Through Artificial Neural Networks, 2007, vol 17,pp 3-8.

[16] Sander, J.W, The epidemiology of epilepsy revisited. Curr Opin Neural, 2003.

[17] Forsgren, L, Prevalence of epilepsy in adults in northern Sweden.Epilepsia,1992.

[18] McCracken, Harry. "Who's Winning, IOS or Android? All the Numbers, All in One Place | TIME.com." *Technologizer*. Time Tech, 16 Apr. 2013. Web. 24 Nov. 2013.

[19] Bohorquez, Davies P.J. "Design of a Portable Wireless EEG System Using a Fully Integrated Analog Front End." *IEEE Xplore*. Southern Biomedical Engineering Conference, 3 May 2013. Web. 26 Nov. 2013