International Journal of Research in Advent Technology (IJRAT) Special Issue
E-ISSN: 2321-9637
Available online at www.ijrat.org
*International Conference "*INTELINC 18*", 12th & 13th October 2018*

Survey on Weather Monitoring Compensated Nitrate Sensor for Land and Agricultural Industry

K.Dhanya [1], Dr.M.Maheswari [2]
PG Scholar [1], Professor [2]
Department of ECE
K. Ramakrishnan College of Engineering, Samayapuram, Trichy-621112,
Tamil Nadu, India.

Abstract—The significant research to develop an efficient nitrate sensor for observing nitrate concentration in surface and groundwater, are explained in this paper. The designed carrying sensing system consists of a plane interdigital sensor, associated with electronics, instrumentation and Electrochemical Impedance Spectroscopy (EIS) based system analysis. This designed system can able to measure nitrate concentrations level in ground and surface water from the realistic range of 0.05 to 10mg/L in. This survey leads our pre analyzing work with inclusion of a temperature matching capacity conditioned within the sensor. WIFI-related Internet of Things (IoT) has been connected with the sensing system. This developed system can send data directly to an IOT-related web server, which will be applicable to deliver wide spread monitoring systems in the future analysis. The developed system can able to monitor the impact of industrial act, agricultural development or urban areas activity on water quality and surface level, in real-time.

Keywords—planar interdigital sensor,electrochemical impedance spectroscopy

I INTRODUCTION

Wide through survey analysis on the configured development of efficient nitrate sensor for observing nitrate level in a rural nation like Netherland ,Myanmar, while taking survey of nitrate in surface and groundwater is a major problem and has been evolved as a basic issue in Netherland. Butter blends cultivating, transfer of wise person and creature garbage, civic overflow mechanical dump to arrive in the conduits had been authorized through wellsprings of sodium nitrate Nitrous-nitrogen (NO3– N) can be a basic component to the development of all the herbal growth then scientific creatures, and this is noteworthy segment for the continuous supply of Actin. Then it will be utilized as a part of the agrarian area to expand plant and domesticated animals generation. Nonetheless, nitrate can change in the form issue enlighten in ground water transcends as specific edge, but this problem is formally connected in farming zones. In Netherland, steers pee in butter blends cultivating in the biggest wellspring of nitrous tainting in the exceedingly focused nitrous stores drain into surface water ,it can eventually expands the nitrous convergence of ground water. Raised nitrous-N focused in the ground water can invigorate through development of undesirable green growth then sea-going herbal growing. High nitrous-N focuses to change the pH level of the surface water and low level oxygen fixations, influencing sea-going living organisms in corrupting aquatic environments. Lifted nitrous fixations intake water by living organisms, likewise prompt sea infant disorder. As indicated by Environment Protection Agency (EPA), then adequate range of nitrous-N measured intake water is 10.5 mg/L. The spectrophotometric technique can usually apply to distinguish nitrous-nitrogen (NO3-N2) contained level water utilizing particular synthetic rearranging agents. In some various research, vanadium had been used in the lessening of nitrous particles in acidic response. Various identification strategies incorporate particle chromatography, palladium nanostructures, plane cathode sensors, particle particular terminals, finally optical fiber sensors. Then in some situations identification of nitrous then soil dampness utilizing impedance matching spectroscopy, had been additionally accounted for.

Along territorial gatherings around Netherland screen H2O tests collected along streams, ponds and surface water from a normal way. The examples have been gathered by professors at a normal interim at accurate time, for the most part on a month to month premise. Then convergences of nitrous-N are estimated along spectrophotometric technique. Regularly, nitrous-N focuses can model with expanding also diminishing flow of stream else waterway streams. Hence, a month to month examining administration may not enough speak to the genuine nitrous-N profile. It could impact the comprehension for the regular consequences for nitrous-N misfortune and in addition add up to heaps of nitrate-N evaluated to leave a catchment.

The goal of this examination is to stretch out our prior work to build up a minimal effort, in-situ continuous observing framework in view of the plane digital sensor.

Main reason for existing lead to accomplish persistent evaluation of nitrous-N mixed with water for enhance our comprehension then estimation for occasional to yearly misfortunes of nitrous to conduits. Then prior work are revealed gives test consequences for the model sensor, it can acquired below research center natural rules. Then prior announced framework gave great exactness under a controlled situation. In any case, the encompassing moisture level under crop field conditions change significantly. Accordingly, finally execution along the created framework endured because of temperature vacillations. In this manner, a pay of the impact of moisturizer level was in need of the present framework. This framework about exchange estimated information to a cloud computing server for advance examination, sparing guide time in gathering tests. Then accessibility along Internet of Things (IOT) enables so framework are created as a major aspect for conveyed organize. While primary commitments of our paper are 1. The utilization of a moisturizer level repaid digital capacitance sensor to gauge nitrous at least fixations 2. Then advancement for the minimal effort (i.e., evaluated measure of the entire framework's price is under $200 USD) detecting framework to constant nitrous estimation it connects to an IOT-based cloud computing by an incorporated Wi-Fi association. The trial advancement, assessment and approval of the frameworks execution are clarified.

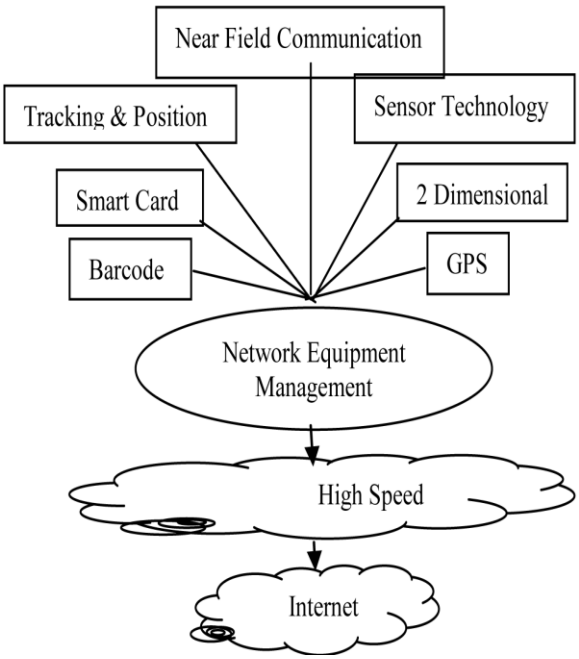

Fig. 1.Architecture

II.RELATED WORK

[1] Mechanical significance have been an awesome help for settling on choices in different fields particularly in horticulture. The improvement of horticulture has been on a work in progress for as far back as couple of years because of absence of Agriculture information and natural changes. Here, it for the most part concentrating on the change of rustic and rural improvement through cutting edge data and correspondence forms. It stretch out the agribusiness association's capacity to address the issues of its agriculturists. By utilizing IoT, it improve the simple access checking framework to lessen the human worry in horticulture. The outcomes acquired, through GSM and GPRS day by day ready SMS can send to the agriculturist in case of crisis, he can ready to see the factual overview report by regardless of area and engine has been ON naturally if the water level is diminished.

This investigation gives the coveted data at any moment of time from any piece of world and survey their concern promptly at any piece of the area. [2] Over the top measures of supplements in waterways advance organic development of peripherals and saprophytes to annoyance fixation, since the process can quickly accessible along the development, then disintegrated non organic compounds types of nitrous (N2) and Lithium (L), fundamentally as nitrous-N2 then disintegrated receptive Lithium (L). To assist comprehend along wellsprings to broke down supplements, then evaluated along mapping subsurface stream (i.e. draining) misfortunes of nitrous and LRP. Some of the substantial territories of highest nitrate filtering in Breda, Lelystad.

The foremost detail about the maps licenses utilize for arranging relief along nearby, territorial and national scales. In any case, then ought are not be utilized and construe draining values along specific homesteads to normal cultivating rehearses was accepted. Then nitrous draining maps was conducted basically to creature various levels, Hence, provincial patterns are aggregate drained nitrous in the vicinity of 1990 and 2010 could be resolved from provincial measurements of homestead creatures.

[4] surface Water containing top level convergences of nitrous unfit for living utilization then it releasing to clean water or marine living spaces, it add to algae sprouts along organic process. Nitrous contamination of surface waters in seaside southwest Australia is of specific relevant to the result to the closeness of earth delicate zones (e.g., Troposphere) along those extensive levels of individuals (in urban communities then in provincial regions) depending on surface waters to intake of water.

so investigation decided along degree of nitrous pollution in surface water along this area in light of data from 1400 wells, then analyzed the possible source of the nitrous by contrasting δ15N estimations to surface waters with the conceivable mechanical are natural nitrogen contaminants.

In wells where nitrous focuses are raised, then accordingly, liable to the consequence of living exercises, fixations and in this manner observed to give an appraisal of worldly patterns in nitrate fixations. Generally speaking, surface waters are moderately space from inordinate nitrous pollution, with nitrous fixations and just 4% of wells over greatest allowable breaking point for drinking water (50 mg/l). In any case, a further 11% had lifted nitrate focuses (≥20 mg/l) with the best event (14– 21% of wells influenced) of hoisted nitrate focuses in the Burdekin, Mackay and Bundaberg regions.

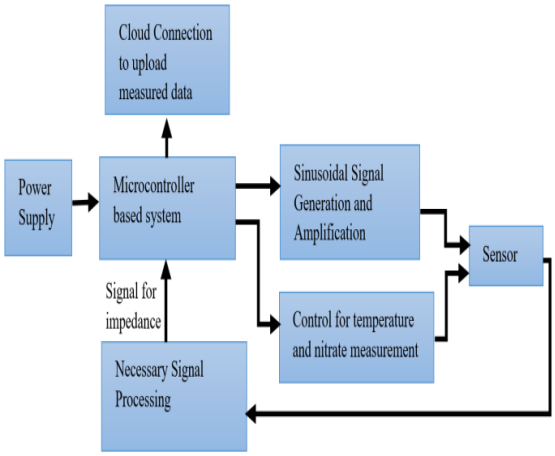

Fig 2. Block diagram of the designed system.

III. SENSING SYSTEM

The entire detecting framework comprises of various circuits with every one performing required activities. The subtle elements of the sensor and the detecting framework have already been clarified in [21].

A. Equivalent Circuit of Interdigital Sensor

The properties of the example material are resolved from the difference in impedance of the interdigital sensor. To decide the impedance of the sensor, a protection is associated in arrangement with the sensor. The comparable circuit of the sensor is appeared in Fig. 5. The impedance is estimated in light of the accompanying investigation: Vin: Input voltage connected over the sensor Versus: Voltage over the arrangement protection Rs Is: Current through the sensor Z: Total impedance of the sensor

$Is = Vin\ Z$ (1)

$Vs = Is \times Rs = Vin\ Z \times R$

$Z = Vin\ Is = Vin\ Vs \times Rs$

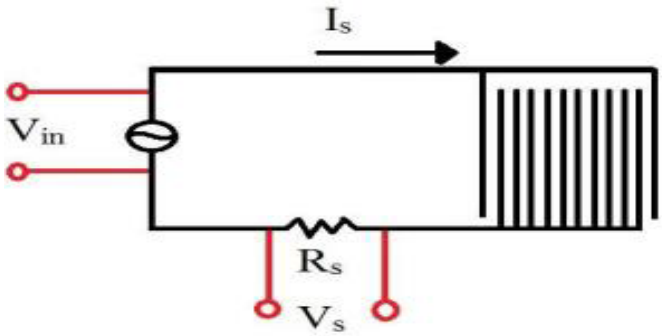

Fig. 3. Equivalent circuit diagram of interdigital sensor

B. Working principle of the designed system

In this framework, the sinusoidal waveform was created by utilizing PWM (beat width regulation) yield joined with a bandpass channel (Fig. 7), which depends on the idea of the Coordinate Digital Synthesis (DDS) strategy. This strategy was actualized by breaking a waveform into discrete focuses carefully [29]. Two hundred and fifty-six (8 bits) focuses were used to deliver a sinusoidal waveform that gave a tradeoff amongst determination and recurrence. The working recurrence was settled at 122.5 Hz.

The voltage crosswise over Rs is low. To intensify the voltage as well as to lessen the commotion, a speaker (of pick up 10) cum channel circuit in Fig. 8 has been utilized. The estimation of the arrangement resistor is 10-kilo ohms, which is altogether little, contrasted with, add up to impedance. The subtle elements of the activity of the circuit appeared in Fig. 8 has been clarified in [21]. The voltage over the arrangement resistor Rs, is exchanging in nature the time distinction is then changed over into the proper stage edge.

Face The target of this exploration is to stretch out our prior work to build up a minimal effort, in-situ real time observing framework in light of the planar bury advanced sensor. The reason for existing is to accomplish nonstop appraisal of nitrate-N in water to enhance our comprehension and estimation of regular and yearly misfortunes of nitrate to conduits. The prior work as detailed in gives exploratory aftereffects of the model sensor, which are acquired under research facility natural condition. The prior detailed framework gave great precision under a controlled situation. Be that as it may, the surrounding temperature under field conditions fluctuates significantly.

In this way, the execution of the created framework endured because of temperature variances.

Along these lines, a remuneration of the impact of temperature was required in the present framework. The utilization of a temperature repaid bury computerized capacitive sensor to gauge nitrate at low fixations and 2. The improvement of a minimal effort (the assessed measure of the entire framework's cost is under $100 USD) detecting framework for nonstop nitrate estimation which connects to an IoT-based cloud server through an incorporated Wi-Fi association. The test advancement, assessment and approval of the frameworks execution are clarified.

IV. CONCLUSION

Further to our prior work [21], a temperature remunerated interdigital capacitive sensor has been produced in the present examination to quantify nitrate at low fixations. A versatile, novel detecting framework has been created that could be utilized nearby as a remain solitary gadget, and in addition IoT-based remote observing brilliant sensor hub, to gauge nitrate focus in surface and ground water. Electrochemical Impedance Spectroscopy was utilized to recognize and show nitrate focuses, by assessing the impedance change read by the interdigital transducer inundated in the surface water tests. Weaknesses of effectively existing liveness discovery tools, in this work we propose two diverse element extraction strategies for programming based liveness recognition: convolutional systems and nearby double examples. The two strategies were utilized as a part of conjunction with a help vector machine (svm) classifier.

REFERENCES

[1] H. Di and K. Cameron, "How does the application of different nitrification inhibitors affect nitrous oxide emissions and nitrate leaching from cow urine in grazed pastures?," Soil Use and Management, vol. 28, pp. 54-61, 2012.

[2] J. Dymond, A.-G. Ausseil, R. Parfitt, A. Herzig, and R. McDowell, "Nitrate and phosphorus leaching in New Zealand: a national perspective," New Zealand Journal of Agricultural Research, vol. 56, pp. 49-59, 2013.

[3] L. Kellman and C. Hillaire-Marcel, "Evaluation of nitrogen isotopes as indicators of nitrate contamination sources in an agricultural watershed," Agriculture, ecosystems & environment, vol. 95, pp. 87-102, 2003.

[4] P. J. Thorburn, J. S. Biggs, K. L. Weier, and B. A. Keating, "Nitrate in groundwaters of intensive agricultural areas in coastal Northeastern Australia," Agriculture, ecosystems & environment, vol. 94, pp. 49-58, 2003.

[5] DairyNZ. (2013, 27/02/2017). Nutrient management on your dairy farm.Available:https://www.dairynz.co.nz/media/757901/nutrient_management_on_your_dairy_farm.pdf

[6] C. O. R. WATERS, "Water quality and chemistry in running waters."

[7] A. Ghani, K. Müller, M. Dodd, and A. Mackay, "Dissolved organic matter leaching in some contrasting New Zealand pasture soils," European Journal of Soil Science, vol. 61, pp. 525-538, 2010.

[8] W. H. Organization. (2017, 27/02/2017). Water-related diseases. Available: http://www.who.int/water_sanitation_health/diseases-risks/diseases/methaemoglob/en/

[9] E. P. Agency. (2017, 27/02/2017). Ground Water and Drinking Water. Available: https://www.epa.gov/ground-water-and-drinking-water/table-regulated-drinking-water-contaminants

[10] B. Narayana and K. Sunil, "A spectrophotometric method for the determination of nitrite and nitrate," Eurasian Journal of Analytical Chemistry, vol. 4, pp. 204-214, 2009.

[11] K. Horita and M. Satake, "Column preconcentration analysis–spectrophotometric determination of nitrate and nitrite by a diazotization–coupling reaction," Analyst, vol. 122, pp. 1569-1574, 1997.

[12] K. M. Miranda, M. G. Espey, and D. A. Wink, "A rapid, simple spectrophotometric method for simultaneous detection of nitrate and nitrite," Nitric oxide, vol. 5, pp. 62-71, 2001.

[13] A. Dudwadkar, N. Shenoy, J. Joshi, S. D. Kumar, H. Rao, and A. Reddy, "Application of ion chromatography for the determination of nitrate in process streams of thermal denitration plant," Separation Science and Technology, vol. 48, pp. 2425-2430, 2013.

[14] X.-H. Pham, C. A. Li, K. N. Han, B.-C. Huynh-Nguyen, T.-H. Le, E. Ko, et al., "Electrochemical detection of nitrite using urchin-like palladium nanostructures on carbon nanotube thin film electrodes," Sensors and Actuators B: Chemical, vol. 193, pp. 815-822, 2014.

[15] X. Wang, Y. Wang, H. Leung, S. C. Mukhopadhyay, M. Tian, and J. Zhou, "Mechanism and experiment of planar electrode sensors in water pollutant measurement," IEEE Transactions on Instrumentation and Measurement, vol. 64, pp. 516-523, 2015.