International Journal of Research in Advent Technology (IJRAT) Special Issue
E-ISSN: 2321-9637
Available online at www.ijrat.org
*International Conference "*INTELINC 18*", 12th & 13th October 2018*

An Approach for Efficient Classification and Prediction of Client Behaviour in Telecommunication

M.Jeyakarthic[1], K.Kavitha [2]
Dept. of Computer and Information Science Annamalai university, Annamalai nagar[1]
Dept. of Electrical and Electronics Engineering Annamalai university, Annamalai nagar[2]
Email: jeya_karthic@yahoo.com,[1] *kavitha_au04@yahoo.com*[2]

Abstract- Anticipating the activity of clients is critical, however vital for advantage masterminded organisations. Information mining strategies are utilized to make such forecasts. In this paper, an action mining approach is proposed, which permits considering noteworthy information and fleeting improvements. Keeping in mind the end goal to frame a joined classifier, action mining is joined with choice tree investigation. In the zone of activity mining, a tree information structure is reached out with hashing strategies and a distance measure calculation is introduced. The consolidated classifier is connected to genuine client information and produces promising outcomes.

Index Terms-Customer behaviour prediction; pattern mining; activity mining; decision tree induction.

1. INTRODUCTION

As of late, administration of associations is moving from "Item Centric" to "Client Centric" [1]. They are not just give items to address the issue of clients yet in addition enhancing their administrations to expand the dedication and fulfillment of the clients. Extreme rivalry in the market has expanded the requirement for retailers to utilize systems concentrated on holding the correct clients. Gaining the new clients is more costly than holding the current clients. To hold the clients, associations are more worry about the client conduct investigation. The central point of accomplishment incorporate taking in costumers' buy conduct, creating advertising methodologies to find idle steadfast clients [4]. Anyway a procedure that is compelling in gaining new clients may not be the best in holding existing clients so with a specific end goal to outline the powerful movement to hold clients, they have to utilize the viable technique for this. So extraordinary promoting systems can be formulated that will target distinctive arrangements of clients. Anticipating those beneficial clients is vital to illuminate and control the basic leadership to keep the items and administrations focused. Customer conduct is the investigation of individual, or gathering about their procedure of choosing and utilizing the item, administrations, thoughts or encounters to fulfill needs. It includes thoughts, administrations and substantial items.

Information mining systems indicates viably and effectively business arrangement can be made and to beat the opposition. New advances of information digging can be utilized for Customer Relationship Management (CRM) and with this diverse showcasing procedures are contrived for various arrangement of clients [2]. Associations need to comprehend the client conduct to enhance their advertising systems. They should comprehend couple of things about their clients, for example, what is the brain research of the client while acquiring the items, what the client considers, feel and select between various options, how the client is impacted by condition, and how clients' choice system varies between items that contrast in their level of significance or intrigue.

The consumer conduct is broke down to making the showcasing systems and open arrangement. The put away information contains the data of about the spending conduct of client, the amount they purchase, which day at what time he/she does the shopping, and what they purchase frequently, in that region and so on. The obtaining arrangements of the clients are put away in the database so it is anything but difficult to bring that information and decided those clients which have made rehash buys [4]. These successions can decide the adjustments in clients' inclinations after some time.

2. LITERATURE REVEIW

2.1. *Customer approach prediction*

Customer conduct can be characterized as the investigation of people, gatherings or associations in an offer to comprehend the procedure of their choosing, anchoring, utilizing and arranging the products, services, encounters or thoughts[3]. Shopper conduct with regards to this examination likewise incorporates consumers reliability and client agitate. Buyer faithfulness can be characterized, as per [5] as rehash support conduct which is the blend of state of mind and conduct. In modern and administration promoting, conduct reliability is seen as maintenance of the brand [7] [8]. Client beat, otherwise called client wearing down or client turnover, is the loss of existing clients to another organization [10]. It is vital to foresee client conduct on the grounds that; the learning of a customer's steadfastness would be helpful for enhancing CRM. It will likewise help in client display building process and assessing the aftereffects of CRM-related ventures [12]. Moreover, it will enhance the achievement rate of gaining client, expanding deals and building up intensity [14]. There are some related research in the field of client conduct contemplates which discussed in detail as follows: In [15] depicts a complete scholastic writing survey of

the use of information mining systems to CRM. Their examination could order Customer Relationship Management along the accompanying measurements; Customer Identification, Customer Attraction, Customer Retention and Customer Development. They likewise distinguished Association, Classification show as the most usually utilized model for information mining in CRM. [16] holds complete audit on the shopper purchasing conduct to uncover two expansive ideal models, the positivist and the non positivist. The positivist worldview includes the monetary, social, intellectual, motivational, attitudinal, and situational points of view, while the non positivist worldview, encompasses the interpretive and postmodern viewpoints. An examination to explore the connection between client grievances conduct, protest taking care of systems and client dependability was completed by [17]. It was found that a developing group of writing recommends that client steadfastness has positive effect on customer maintenance. In 2003, a precise audit on online customer conduct was completed by [18] and an exploration system with three key building squares (expectation, reception, and duration) was proposed. The discoveries demonstrate those elements influencing aim of purchasing from the web is the fundamental spotlight on the current research utilizing TRA (Theory of Reasoned Action) and its related speculations as the strategy. [19] played out a condition of-workmanship audit of different strategies and investigates include in beat expectation and inferred that Customer stir has been recognized as a noteworthy issue in Telecom industry and forceful research has been directed in this by applying different information mining systems. Glancing through all the efficient audits in writing till presently, there has not been much consideration paid to survey of writing on foreseeing purchaser conduct comprehensively. Keeping in mind the end goal to fill this hole and in light of the significance of client conduct expectation, this paper is doing an efficient audit on client conduct forecast considers with an attention on parts of client relationship administration, strategies and datasets.

2.2. *Decision tree*

Decision tree is utilized to accept future patterns and to extricate models in view of the interconnected choices [6]. It works upon the important of ordering information into specific classes in accordance with their highlights. Inward hubs take after root hub by cover all presence alternatives [9, 20, 11]. In this way a tree is outlined with its single circular segment relating particular reactions. The decision trees are most normally utilized instrument for classification and forecasts of future occasions. The development of such trees is finished in two noteworthy advances: building and pruning. Amid the primary stage the informational collection is apportioned recursively until the point that large portions of information in each group are clustered into a module. The second stage at that point takes out a few branches which comprise the uproarious information (those with biggest evaluated mistake rate). Truck, a Classification and Regression Tree, is made by recursive division of a case into subgroups until the point when a distinct model has been met. The tree produces until the point that the decrease of contamination falls underneath a client characterized limit. All hubs in the Decision tree are test condition and the expanding depends on estimation of value being applied. The tree is speaking to a gathering of various govern sets. While assessing a customer informational index the game plan is finished by intersection through the tree until the point when the leaf hub is stressed. The mark of leaf hub is apportioned to the customer record under evaluation. Figure 1, depicts a decision tree which is constructed for a telecom company. Customers are classified based on call duration into local, overseas and customer care calls.

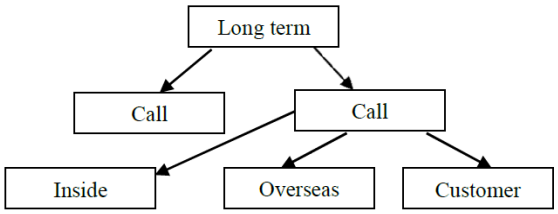

Fig.1. Simple decision tree model of a telecom company

3. PROPOSED SYSTEMS

In the proposed framework, client's basic standards of conduct are created from existing database. Patterns are converted as sequences based on the activity (behaviour) of the customer. Based on the activity, Apriori algorithm is utilized for construction of activity tree. After construction of activity tree in a consistent manner, it is traversed using hashing function for prediction customer support activities. The proposed system is pictorially represented in figure 2.

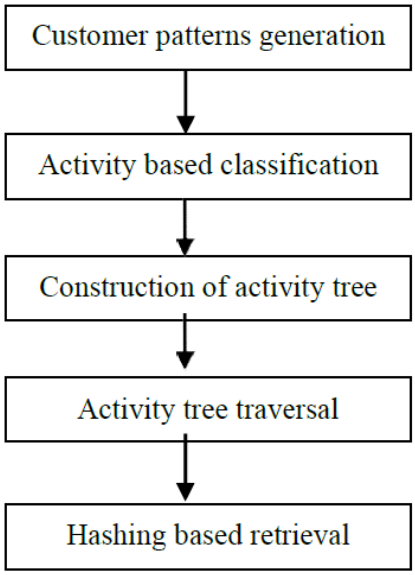

Fig.2. outline of the proposed work

4. ACTIVITY MINING

Sequence mining become in the beginning brought for market basket analysis in which temporal family members among retail transactions are mined. Therefore, maximum sequence mining algorithms like Apriori All , GSP and SPADE had been designed for mining common sequences of itemsets. In market basket evaluation, an itemset is the set of various products sold within one transaction. In telecommunications, patron events do not occur together with different activities. Therefore, one has to address mining common event sequences, that is a specialization of itemset sequences. Following the Apriori principle, frequent sequences are generated iteratively. A series of two events is generated from frequent sequences consisting of one occasion and so on. After producing a new candidate collection, its guide is checked in a database of purchaser histories. The guide is defined as the ratio of customers in a database who incorporate the candidate series of their history.

A critical question in pastime mining is the definition of the connection "J is contained in K" (denoted as J € K), that is decisive for figuring out the assist of a chain. Originally, a chain J is contained in a chain K, if all elements of J occur in K in the equal order. It does not matter if J and K are identical or if one or greater additional activities are contained in K as well. A strict definition might now not permit any greater occasions in among the events of collection K, however at its beginning and quit. For instance, (III → II → I) € (V→V→V→III→IV→II→IV→I→VI) is true inside the authentic definition, however not in the strict one as there are two occasions IV which aren't allowed.

In this approach, we want to apply pastime mining for class. If a positive sequence of events was identified main to a sure event with an excessive confidence, we need to apply this collection for classifying customers displaying the same series. If we selected the stern definition of "is contained in", we might no longer classify customers efficiently who contain a totally full-size sequence but with an extra event in between. This extra occasion will be a wrong call which isn't always related to the alternative events in the sequence. The authentic definition could allow many more occasions taking place after a matched collection. In the software to patron behaviour prediction, an excessive variety of greater current events after a sizable sequence would possibly lower its impact. Therefore, we introduce two new pastime mining parameters: *intercall*, the most variety of allowed greater events in between a sequence and *extercall*, the most range of events at the give up of a series earlier than the incidence of the occasion to be anticipated. With those parameters, it is viable to determine the help of a candidate series very flexibly and correctly for patron behaviour predictions. For example, the offered instance is true if *intercall* =5 and *extercall* = 7. It isn't real anymore, if one of the parameters is reduced.

4.1. *Construction of activity tree*

Various database sweeps, which are fundamental for generation of pattern is one of the principle bottlenecks of Apriori-based calculations. Such costly sweeps can be maintained a strategic distance from by putting away the database of client accounts effectively in principle memory. In affiliation control mining, tree structures are utilized much of the time to store mining databases. In the territory of action mining, trees are not as alluring as cross section and bitmapnap information structures. This is because of littler packing impacts within the sight of itemsets. For our situation, and additionally in the utilization of activity mining to web log investigation where visit arrangements of single occasions are mined, tree structures appear to be an effective information structure. In this paper, such a tree structure is utilized to store groupings compacted in fundamental memory.

In the action Tree, each component of an action is spoken to in an internal or leaf hub. The root hub and every internal hub contain maps of all immediate successor hubs. Every leaf speaks to one conceivable augmentation of the prefix grouping characterized by the parent hub. The root hub isn't speaking to such a component, it just contains a guide everything being equal, which are the main components from all groupings. Each hub, aside from the root hub, has a number counter connected which shows what number of successions are finishing there.

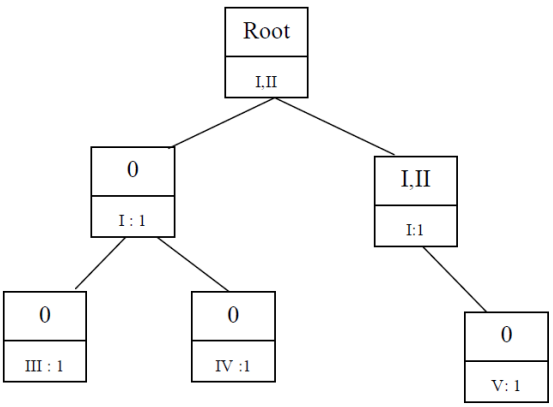

Fig . 3. Activity tree

A case for Tree traversal containing five successions in figure 3 is discussed as follows, to recover the exercises from the tree, one can begin at each hub with a counter more prominent than zero and take after the branch in the tree towards the root hub. Note that if the succession (I→II→ III) is put away officially, only a counter should be expanded if a similar arrangement is included once more. On the off chance that one needs to include (I→II→III→IV), the last hub with the III

turns into an internal hub and another leaf hub containing the occasion IV with a tally of one is included.

The smaller stockpiling of exercises accomplished utilizing the action Tree is because of two compacting impacts:

The use of counters as in maintains a strategic distance from the different stockpiling of similar exercises. Clearly, the pressure proportion depends particularly on the kind and measure of information. Tests with genuine client information demonstrated that the utilization of counters lessens the memory important to store the groupings by a factor of four to ten.
Exercises with a similar prefix arrangement are put away in indistinguishable branch of a tree from done in the limited state machines known from string design coordinating. Particularly if groupings are long, this system can decrease the memory required altogether. In arrangement mining calculations like are portrayed in the accompanying subsection, it happens every now and again that a hopeful movement is being sought in a database keeping in mind the end goal to decide its help. These hunts can be exceptionally tedious, regardless of whether the database is put away in a proficient information structure.
With a specific end goal to accelerate seeks in the movement Tree, hash tables are utilized in each hub which contain all occasions happening in every succeeding hub. On the off chance that an applicant movement is sought in the tree, the pursuit can be pruned at a beginning period if not all occasions in the looked exercises are incorporated into the hash table of the present hub.
The hunt calculation would check the hash table of the root hub first. As hash tables give steady time execution to embedding and finding, the support of hash tables and in addition queries don't require much additional time. Likewise the memory overhead is peripheral as it is adequate to store little pointers to occasions in the hash tables.

4.2. *Hash table and hash function*

Hash table is constructed for the developed activity tree. For hashing, activities are clustered as parameter for tree. Value is the total number of activities in individual node of the tree. Keys are number of customers in the clusters. Index for hash table is generated for tree is given in figure.4

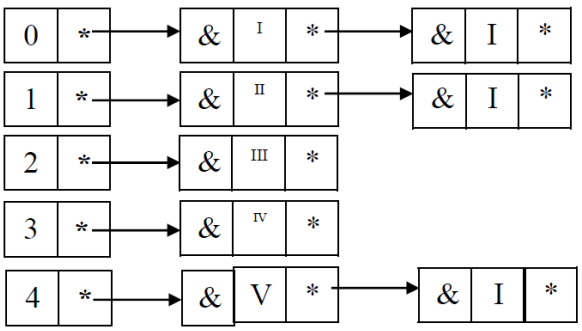

Fig 4. Hash table

After generation of keys, values and indexes, frequent and interesting patterns are generated from the clustered groups. The generated patterns are utilized for policy, customer support and revenue prediction decision support transactions.

5. TEST FOR VARIATION BETWEEN THE GENERATED PATTERN AND TARGET POLICY

When a new policy for customer support or revenue enhancement is devised, it is applied in the activity tree. The distance between the pattern in tree and policy is calculated using hypothesis. Policy is treated as a query for traversal in the tree. Tree hold the patterns as leafs which are depicted in the hash table as targets.
The test of hypothesis are assumed as follows.

Hypotheses:
H_0 : The query and target belonging to the same class.
H_1 : The query and target belonging to the different class.

The test statistic (Z) is defined as in equation (1),

$$Z = \frac{U - E(U)}{SD_{UCorr}}$$

Where,

$$U = (n_q \times n_t) + \frac{n_q \times (n_q + 1)}{2} - T_q$$

Tq is the larger of the sum of ranks of either the query image or the target image; nq and nt are the number of activities in the query and target respectively.

$$E(U) = \frac{n_q \times n_t}{2}$$

$$SD_{UCorr} = \sqrt{\frac{n_q \times n_t}{n(n-1)}\left(\frac{n^3 - n}{12} - \sum_{i=1}^{k}\frac{t_i^3 - t_i}{12}\right)}$$

and *k* represents number of tied ranks; t_i represents the number of subjects sharing rank *i*.

$$n = n_q + n_t$$

Critical region: It is concluded that the query and target are same, if $Z < Z_{C_\alpha}$ where Z_{C_α} is the critical value at the level of significance α**; otherwise, it is concluded that the query and target are different.**
Query is applied as parameter in tree using the above mentioned hypothesis. In the hypothesis Z test is applied as measure of efficiency for deviation of query

from target, based on the positive value; adoption of policy measure is evaluated.

6. CONCLUSION

In this paper an attempt has been made to predict the client behavioural approach for telecom industries. This model can be effectively utilized for customer support, revenue based policy adoption, competitor's market analysis, etc. Distance measure is utilized for efficient retrieval of interesting patterns for practical implementation from existing database. Since it is a tree based hashing approach, computational and iterative complexities are reduced to a larger extent. Inference of knowledge is effectively handled by adopting hash based index, since it is a ad hoc approach. When compared to previous approaches, proposed system is effective for easy adoption to existing databases.

REFERENCES

[1] Adnan Amin ; Changez Khan ; Imtiaz Ali ; SajidAnwar. (2014): Customer Churn Prediction in Telecommunication Industry: With and without Counter-Example", Network Intelligence Conference (ENIC), IEEE.

[2] Nabavi Sadaf and Jafari Shahram. (2013): "Providing a Customer Churn Prediction Model using Random Forest Technique". 5th IEEE-Conference on Information and Knowledge Technology (IKT), pp. 202-207.

[3] Raorane A. & Kulkarni R.V. (2011): "Data Mining Techniques: A Source for Consumer Behavior Analysis," Shahu Institute of business Education and Research, pp. 1-15.

[4] Mestre Maria Rosario and Victoria Pedro. (2013): "Tracking of consumer behavior in e-commerce". 16th International Conference on Information Fusion, Istanbul, Turkey, pp. 1214-1221,

[5] East, R., Gendall, P., Hammond, K., & Wendy, L. (2005). Consumer loyalty: Singular, addictive or interactive? *Australian Marketing Journal, 13*(2), 10–26.

[6] Chu, B. H., Tsai, M. S., and Ho, C. S., (2007): "Towards a hybrid data mining model for customer retention", Knowledge-Based Systems, 20, pp. 703–718.

[7] Reichheld, F.F. (1996): The Loyalty Effect. Boston: Harvard Business School Publications.

[8] Reinartz, W., Kumar, V. (2000): On the profitability of long-life customers in a non-contractual setting: an empirical phase and implications for marketing. Journal of Marketing 64 (4), 17-36.

[9] Berry, M. J. A., and Linoff, G. S. (2004): "Data mining techniques second edition – for marketing, sales, and customer relationship management".

[10] Kerdprasop N., Kongchai P. and Kerdprasop K., (2013): "Constraint Mining in Business Intelligence: A Case Study of Customer Churn Prediction", International Journal of Multimedia and Ubiquitous Engineering, vol. 8, no. 3.

[11] Chen, Y. L., Hsu, C. L., and Chou, S. C., (2003): "Constructing a multi-valued and multilabeled decision tree", Expert Systems with Applications, 25, , 199–209.

[12] Buckinx W., Verstraeten G., Van den Poel D. (2007): Predicting customer loyalty using the internal transactional database. Expert Systems with Applications 32.

[13] Kim, J. K., Song, H. S., Kim, T. S., and Kim, H. K., (2005): "Detecting the change of customer behavior based on decision tree analysis", Expert System with Applications, 22, 193–205.

[14] Qiu J. (2014): Predictive Model for Customer Purchase Behavior in E-Commerce Context in the Proceedings of Pacific Asia Conference on Information Systems (PACIS).

[15] Ngai, E. W. T., Xiu, L., and Chau, D. C. K. (2009): Application of data mining techniques in customer relationship management: A literature relationship and classification. *Expert Systems withApplications*, *36*, 2529-2602

[16] Brosekhan A. A. (1995) Consumer Buying Behaviour – A Literature Review *in* Journal of Business and Management (IOSR-JBM), PP 08- 16

[17]. Komunda M (2013): Customer Complaints Behaviour, service recovery and behavioural intentions: Literature review. Int. J. Bus. Behav. Sci. 3(7):1-29.

[18]. Cheung, C. M. K.; Zhu, L.; Kwong, T.; Chan, G. W. W.; and Limayem, M. Online Consumer Behavior: A Review and Agenda for Future research. In Wigand, R. T.; Tan, Y.-H.; Gricar, J.; Pucihar, A.; Lunar, T. (eds.), Proceedings of the 16th BLED eCommerce

[19] KiranDahiya, KanikaTalwar. (2015): Customer Churn Prediction in Telecommunication Industries using Data Mining Techniques- A Review inInternational Journal of Advanced Research in Computer Science and Software EngineeringVolume 5, Issue 4, pp 417-43.

[20] Buckinx, W., Moons, E., Poel, D. V. D., and Wets, G. (2004): "Customer-adapted coupon targeting using feature selection", Expert Systems with Applications, 26, 509–518.