International Journal of Research in Advent Technology (IJRAT) Special Issue
E-ISSN: 2321-9637
Available online at www.ijrat.org
*International Conference "*INTELINC 18*", 12th & 13th October 2018*

Advanced Real time Atomization of Agricultural Pumping System for Social Modernization Using WSN Protocol

D.Kalaiarasan[1], S.Ramalingam[2], K.Renugadevi[3]

*[*1] Assistant Professor, Department of ECE, Government College of Engineering - Srirangam*

2 Assistant Professor, Department of ECE, Government College of Engineering – Srirangam

3 Assistant Professor, Department of EEE, Government College of Engineering - Srirangam

ramvlsi104@gmail.com renu.sks90@gmail.com

ABSTRACT: The aim of proposed paper is to implement real time atomization of Modern Agricultural System using WSN protocol and renewable energy source method. This paper ensure the pumping system in agricultural sector to be a valuable process with low cost , low power, efficiency, compactness, etc. In this paper, Wireless sensor network (WSN) have been developed for environmental agricultural monitoring and management of the crop field. Nodes in the wireless network transfer environmental factors at proper instants.

This system was designed to monitor the status of temperature, humidity and soil moisture using android mobile phone. The WSN does not require any external power supply as it obtains its energy from a solar panel which is a renewable source of energy. Various nodes in different places are connected via WSN which transmits and receive the data in a node that transmits the status of the crop field to the user through IoT to control the pumping system.

INDEX TERMS: Wireless sensor nodes, Arduino, LM35, moisture and humidity sensors, GSM modem.

INTRODUCTION:

Agriculture has been the most important need from the starting of the human civilization. It has seen many levels of development and improvement in technology with time. In last few ten years varying weather condition, rise in global temperature and pollution, has led to abnormal environmental conditions like raining. Traditional way of farming is unable to cope up with these environmental changes. Good control over Environmental parameters like temperature, humidity, and moisture plays important role in growth of the plant. It is seen that, due to rise in temperature, respiration rate increases that results in reduction of sugar contents of fruits and vegetables. At lower temperatures photosynthetic activity lowers down.

Humidity is important for moisture loss and temperature management of the plant. For high humid environment, evapotransmission will be low and more water will be saturated in the leaf area. This results in enlargement and formation of fungus in the porous area of the leaf. Moisture is danger for seed germination and uptake of nutrients by the plant. Excess water may stop gaseous exchange between the soil and the atmosphere which reduces root respiration and root growth.

The advancement in the technologies has enabled the state of art technology at a reasonably low cost. Wireless sensor network (WSN) can be used in such system to improve its monitoring capability by sharing sensors all over the field and monitoring environmental parameters automatically. WSN consists of small nodes which work on its own and has a sensors embedded. They collect the data and transmit it over wireless medium to a central node where data from all the nodes is received and processed.

In this paper, WSN based monitoring system for the agriculture was developed for automation. Integrated sensor is used for temperature and humidity and self-developed sensor based on electrical conductivity is used for moisture. Zigbee protocol was used for collection of field data at centre

node and for user interface Global System for Mobile communication (GSM) service was used as it is reliable and easy to meet the needs of most of the people. For future purpose, data is stored in a memory for computing.

It is effective to use the wireless links than the wireless lines in transmission due to various losses in the transmission. In the coming years, it is expected that the Wireless Sensor Network (WSN) will be commonly used in applications in consumer electronics, PC peripherals, home automation, home security. Most of the developments and experimental deployments of WSN are inclined to be achieved for citizen in towns. However, there are some researches to share the technology with people in a farming village reported the result of deployments in a vineyard. The contributions of our paper are organized as follows. The system architecture system is presented from sensor/actuator node hardware in the bottom to management sub-system in the top and is evaluated in the real deployment.

EXISTING SYSTEM:

The challenges in agricultural monitoring may be improved from the selection of the deployment range. For instance, the transmitted signal by the sensor node is decreased when the agriculture field is separated by some resistance. The 'Zigbee' wireless protocol has low power consumption. Lora and Sigfox are preferred to work with low power consumption and long radio range.

Zigbee and Bluetooth low energy are designed for battery powered devices. These Technologies consume power through low duty cycling and enter sleep mode to increase the Battery lifetime. Classic BT, Wifi, GPRS, Lora and Sigfox have higher power consumption than Zigbee. Although Zigbee has a shorter communication range than Lora, Sigfox and GPRS, this range may be extended with a router node to overcome the node deployment limitations in agricultural practices.

PROPOSED SYSTEM:

In the Internet of Things (IoT) pattern, all things which are everywhere will be on the network in one form or another. The purpose of this study paper is based on th Internet of Things (IoT) technology which is being applied to the agriculture sector.

To successfully construct such a smart agricultural environment, the development of essential Internet of Things (IoTs) technology optimized for agriculture. Such as sensor hardware, middleware platforms, routing protocols and application services for agricultural environment is needed.

Building IoTs has advanced significantly in the last two years since it has paved the way to a new dimension to the world of information and communication technologies. The sensor nodes are arranged randomly or orderly in the working environment through the wireless communication.

The nodes cooperatively sense and collect data from the object covered by the network, make effective processing and management of the data, and eventually produce accurate information of the object. The main feature of the WSN is scale, range, self-organization and network dynamics. Also, it does not require any external power source as it obtains its energy from solar panel which is a renewable one. A wireless sensor network(WSN) is by hundreds of small ,low cost nodes that are fixed with drawbacks in memory, energy and processing capacity.

WSN:

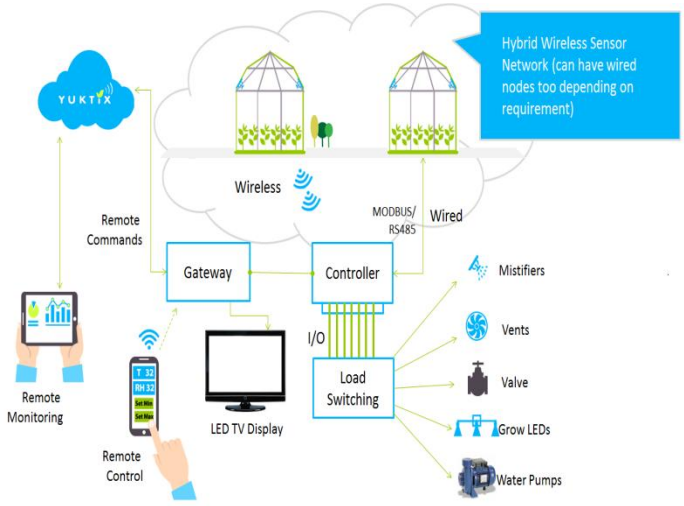

Recent trends in wireless communications and electronics have enabled the roll out of low cost, low power and multifunctional sensor that are small in

dimension and communicate in a huge distance. WSN is a high performance infrastructure free network grounded on several technologies including but not limited to sensor technologies and network communication technologies.

The network consists of wireless sensor nodes, each of which has a wireless communication module, processor module, sensor module and a power supply module. The nodes in the sensor can be orderely or unorderely arranged in a working environment. Via wireless communication, the nodes co-operatively sends and receive the data from the object covered by the network, make a effective processing and management of the data and eventually produce the accurate information of the object. The main features of the WSN are scale, range, self organization and network dynamics.

BLOCK DIAGRAM:

WSN-1

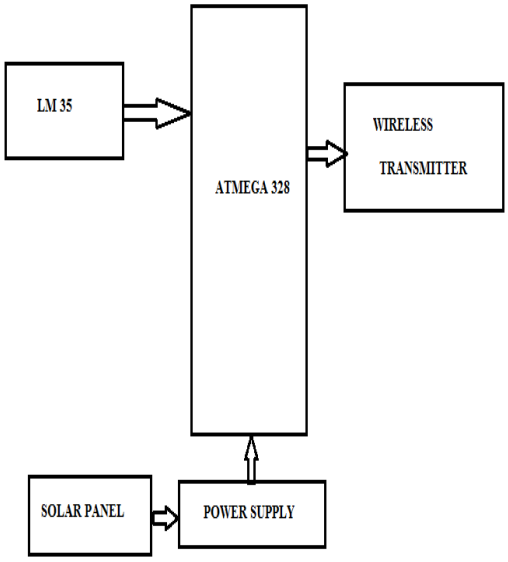

The temperature sensor LM35 sense the temperature from the crop field and produces the output digitally. The sensor senses the field temperature and is interfaced with microcontroller. It gives the sensed signal to the central node via wireless transmitter. The WSN node does not require any external power supply as it obtains its energy from a solar panel which is a renewable source of energy.

WSN-2

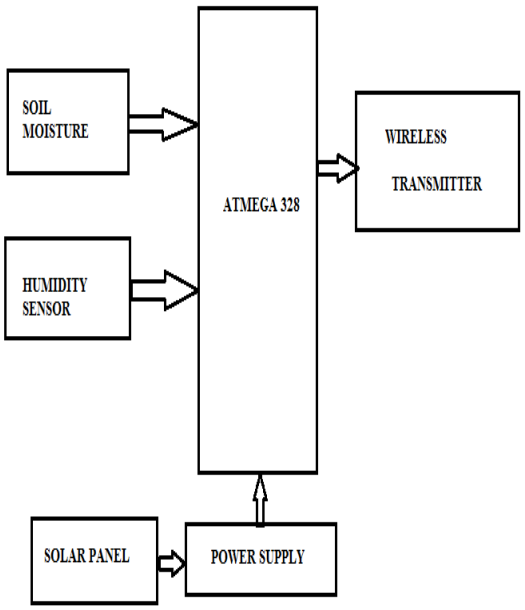

CONTROL UNIT RECEIVER:

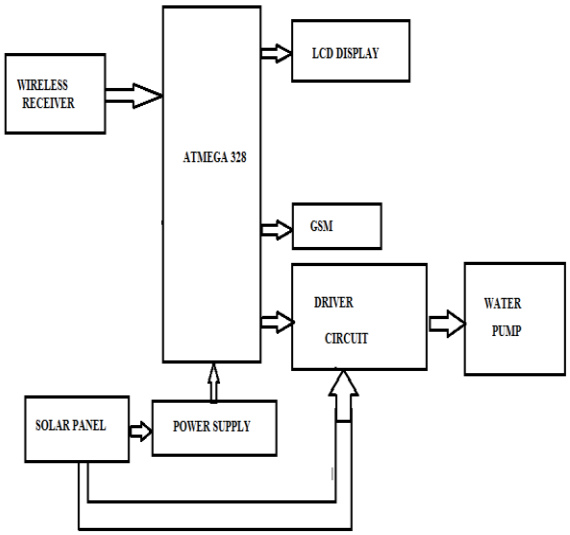

It senses, measures and report the relative humidity in air. So, it measures both temperature in air and moisture. It transfers the sensed analog signal to the central node through the wireless transmitter. The system has a WSN module, which sends the sensor readings to the server over the Wireless Network. The server further allows the user to access the sensor data at any time

CIRCUIT DIAGRAM:

CONTROL UNIT:

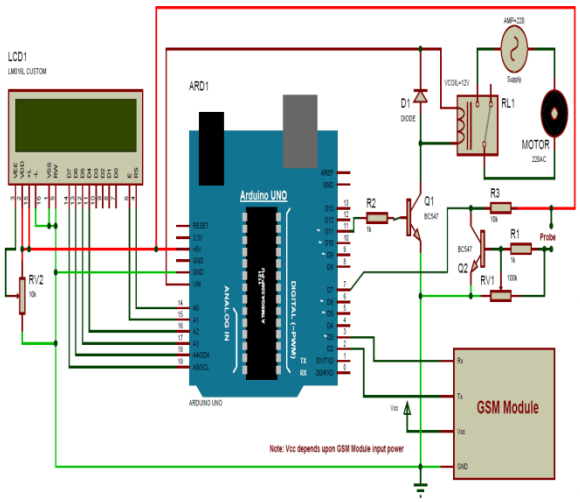

WORKING PRINCIPLE:

In this section, we proposed various aspects regarding the design along with implementation of Controlled Environment Agriculture(CEA). CEA's system provides automated control and monitoring programme. This proposed work is intended to offer ease of use., effective and reliable control system. It helps in reducing the amount of water and energy required. This system will increase yield for farmers at a moderate and accessible cost.

The proposed system is modeled using Arduino mega development kit which connects to light sensor for measuring the light intensity, environment temperature/humidity sensor for getting the temperature and humidity in surroundings.

Moreover, this system can be used to continuously analyse the temperature, water level and the amount of light reaching the plants which is greenhouse system.

Temperature and humidity measurement are required for the analyzing the environmental surrounding of the plants. Various plant species have distinct ideal temperature and humidity ranges. Examining and controlling the temperature and humidity of the plants from droughts and extreme temperatures. Furthermore, the light sensor is essential in measuring the information regarding the levels of light received by the crops. This system encompasses a wide range of sensors. The Arduino mega development kit contains a microcontroller in built, and helps us to integrate all the sensors and display the sensor readings can also acts as input device.

A User Interface is used to take the input from the touch LCD. Moreover, the system has a WSN module, which sends the sensor readings to the server over the Wireless Network. The server further allows the user to access the sensor data at any time.

HARDWARE REQUIREMENT:

TEMPERATURE SENSOR:

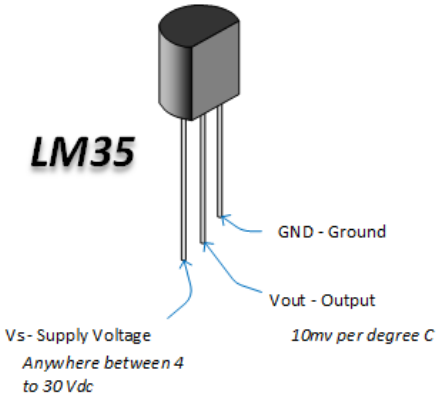

The LM35 series are integrated circuit temperature devices with an output voltage linearly proportional to centigrade temperature. LM35 has a merit over the linear temperature sensor device measured in Kelvin, as the user does not need to subtract the large constant voltage from the output to obtain convenient reading. LM35 device is rated to operate a -55 degree celsius to 150 degree celsius temperature range. The device used with single power supply or plus and minus supplies. It receives the input from surroundings and produce the output digitally. The sensor senses the field temperature and is interfaced with microcontroller. It also possesses low self heating and do not cause more than 0.1 degree celsius temperature rise in air.

INTERFACING WITH TEMPERATURE AND HUMIDITY SENSORS:

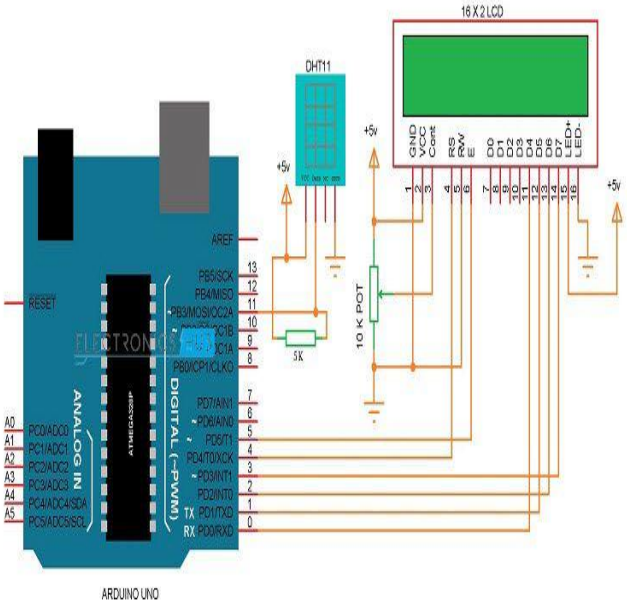

HUMIDITY SENSOR:

It senses, measures and report the relative humidity in air. So, it measures both temperature in air and moisture. The sensor comprises of two metal plates and contains a non conductive polymer film between them. The film collects the moisture from the vacuum which leads to voltage between the two plates to vary. This potential changes are converted into digital readings showing the level of moisture in the air. Its operating temperature range is of 20 degree celsius. The most common size for supply voltage are 3 to 5.5 volt and 4.5 to 5.25 volt. Supply current has the range of 100 microamps and 15 milliamps.

:

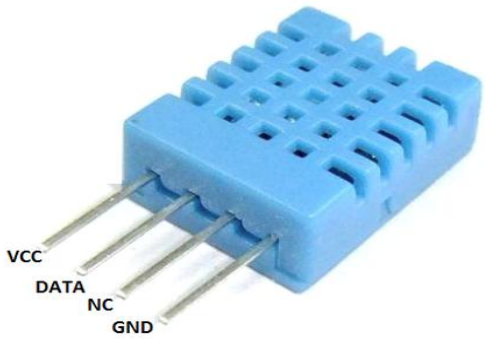

SOIL MOISTURE SENSOR:

It typically refers to sensors, that estimate volumetric water content. The sensor is capacitive type. The sensors gives analog output of zero volts, when there is 100% of moisture and 5 volt for 0% moisture. It measures the dielectric constant of the soil. The power needs of this sensor is very low and its resolution is very high. Measuring soil moisture in the fields is very much important for agriculture to help the farmers manage their irrigation system more efficiently.

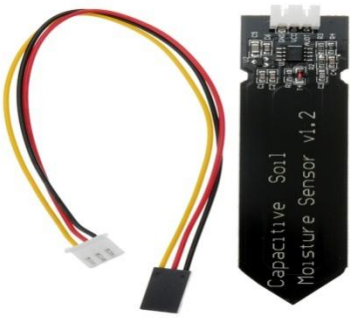

INTERFACING WITH SOIL MOISTURE SENSOR:

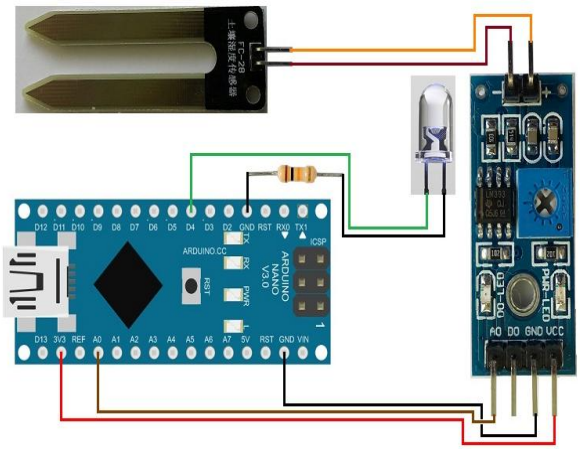

ADVANTAGES OF WSN:

- Suitable for the non reachable places such as over the sea, mountains, rural areas, deep forests.
- Flexible if there is a random situation when additional work station is needed.
- Implantation pricing is cheap.
- It avoids plenty of wirings.
- It is flexible to undergo physical partitions.
- It can be accessed by using centralized monitor.

APPLICATIONS:

- The applications for WSN's involve tracking, monitoring and controlling. WSNs are mainly implemented for habitat monitoring, object tracking, nuclear reactor control, fire detection and traffic monitoring.
- Area monitoring is a very common application of WSNs in which the WSN developed over a region where some incident might be monitored Eg. A substantial variety of sensor nodes may very well be deployed over the battlefield to detect enemy instrusions rather than using landmines.
- Wireless sensor networks may also employed to control the temperature and humidity levels inside the greenhouses.

CONCLUSION:

This paper designs an intelligent agricultural monitoring system based on the WSN and deep learning algorithm. The system was capable of measuring environmental parameters and send this data to sender node periodically. A real time monitoring system is made to provide clearer and more accurate details of the field. User interface was designed at the user end which provides simple interactive interface to the system. User was able to set moisture threshold condition from anywhere by sending message using application installed in user mobile phone.

The system is capable of taking required action based on receiving data. Power supply is obtained from renewable sources. The device can relatively easily operated by the end users, can be implemented in small as well as large scale farming.

REFERENCES:

[1] Tang,Q.(2013). Technology development of foreign agricultural internet of things and its Enlightenment to China, Bulletin of Chinese academy of sciences.

[2] S.Mathurkar and D.Chaudhari, "A Review on Smart Sensor Based Monitoring System for Agriculture", International Journal of innovative technology and exploring engineering.

[3] Wireless Sensor Networks, The Morgan Kaufmann Series in Networking Series Editor David Clerk, M.I.T., Feng Zhao Leonidas J.Guivas Morgan Kaufmann publishers in an imprint of Elsevier