International Journal of Research in Advent Technology, Special Issue, June 2018
E-ISSN: 2321-9637
International Conference on "Multimedia Processing, Communication and Information Technology" (MPCIT -2018)
Available online at www.ijrat.org

IOT Based Lightning Prediction System ANFD Measurement of Different Weather Parameters

Anuragini C V
M.Tech, Department of ECE
BNM Institute of Technology
Bengaluru, India
anuraginivkolkar@gmail.com

PRABHAVATHI P
Associate Professor, Dept. of ECE
BNM Institute of technology
Bengaluru, India
prabhavathip@bnmit.in

Abstract- Weather monitoring using wireless sensor networks is a dynamic system which can be used to alert the living population through existing cellular communication system. Other environmental parameters can be recorded and saved on cloud using the same system. Internet of Things can be used for this purpose. This paper presents a weather station made of temperature, humidity, pressure sensors embedded in an IoT based microcontroller board. The station is controlled through Internet connected via Wi-Fi or Ethernet or GSM. This also includes a Lightning prediction system using AS3935 Franklin Lightning sensor which receives EM waves generated from Intra Cloud and Cloud to Ground Lightning activity and predicts the next disaster distance. The coverage area for this system is around 1kM to 10 Kms.
Keywords—WSNs-wireless sensor networks, IoT-internet of things, Weather monitoring, Lightning prediction, Environment Monitoring, Air Quality monitoring, SMS, API

I. INTRODUCTION

Weather monitoring is an important in our day to day life activities. Monitoring or predicting environmental parameters plays important role in the field of agriculture and science. Capturing such live parameters for analyzing, predicting and storing for data mining will be useful in areas like airports, harbors, irrigation, space stations, and hill stations. In earlier days, the seasons where predictable and necessary precautions were taken in individual seasons. Since 1990 global warming continuously having an adverse effect on our climatic conditions and the predictable climatic conditionshasbeen changed since then. Now the abnormal climatic conditions tend to change the seasonal predictions on rainfall and sunny days. This effects on man day to day life and even animal kingdom and forest regions. Since 1990 global warming predicted to grow from 25% to 40% till date. This drastic change is the reason behind abnormal rainfall or no rain at all leading to sudden change of temperature, humidity and pressure. Such conditions must be recorded and must be made available for further weather-related studies. In acquaintance to large utility of remote weather monitoring in various areas ranging from house hold applications to industrial applications knowing the conditions around human beings is necessary. With the help of IoT, the weather conditions at a particular location can be monitored from a distant place by remote user, which eliminates the physical presence in order to avoid Natural Disasters at the location by using current technology. Person's physical presence may be dangerous in certain conditions like leakage of poisonous gases. In such condition distant approach is possible. In Disaster management field predicting Thunder/Lightning strike plays one of the major roles. Detecting such disasters prior to current time would save many lives.

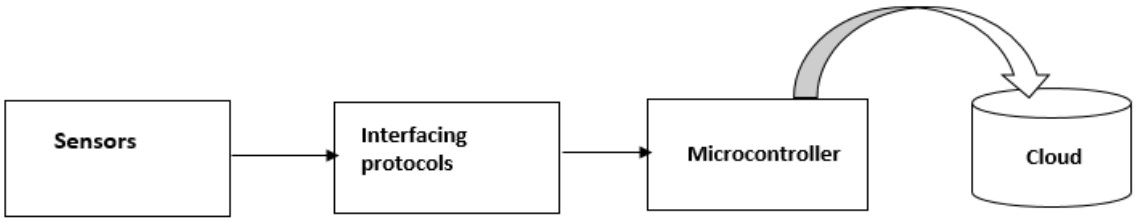

Fig Proposed design – Block level representation

II. METHODOLOGY

A.System level Design

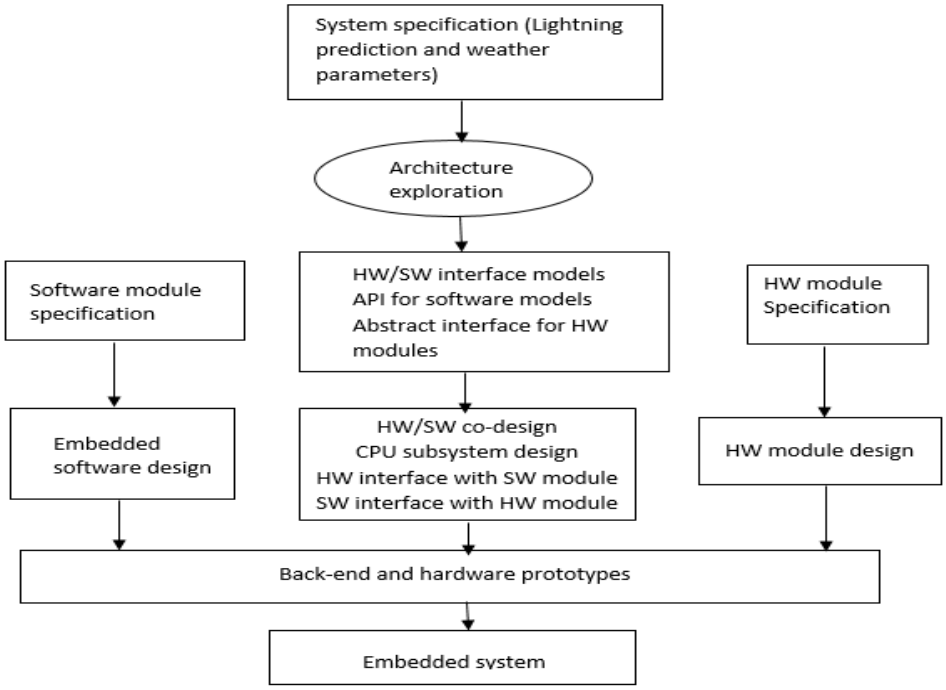

Fig 2: System design methodology

Design of embedded systems can be subject to many different types of constraints, including timing, size, weight, power consumption, reliability, and cost. In the system level design specification prediction of cloud to ground lightning within a 40 minute of time will alert the people and monitor the various weather parameters like temperature, pressure, humidity and air-quality. Raspbian Operation software is part of software design and hardware module design is by connecting sensors to the Raspberry Pi through protocols (I2C and SPI) in order to get the address for each sensor in the terminal that address gives the separate thread for each sensor, the software module after getting the API key upload the sensor values to the server.Designing embedded systems require to specify and design hardware and software separately then unifies the design gives the embedded system

B. Design Description

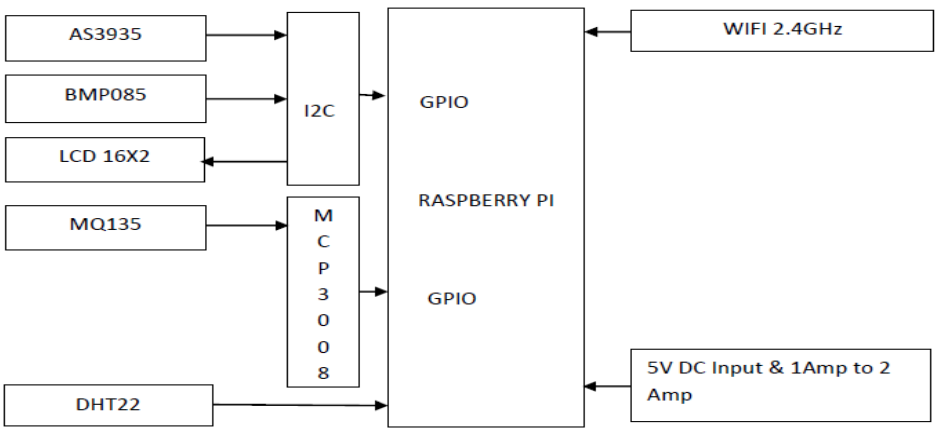

Fig 3: block diagram of the proposed work

Currently proposed system of weather monitoring system will monitor various weather parameters like temperature, atmospheric pressure, humidity, Air Quality for all these measurements various sensors are connected to the circuit. As project is based on Raspberry Pi. It acts as a microcomputer and perform various functions efficiently, all the weather sensors are connected or interfaced with the raspberry pi. All the parameters collected by these sensors will send data to the raspberry module& store the data on SD card of raspberry pi module. Then after that at the output

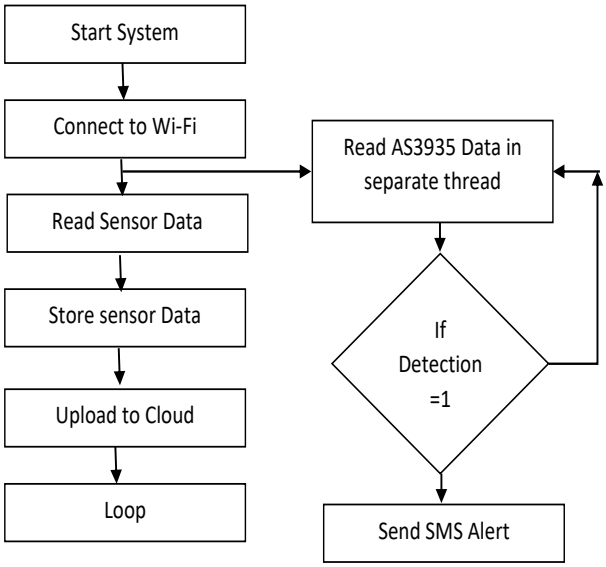

Fig. 4: Event flow of the system

Environment variables are stored in memory and cloud for any further analysis. The IoT solution provides far better and easy installation and maintainability. Using IoT devices the work flow remains as simple as possible. Once the hardware components are intact the system has to be guided to get the data and form a format to upload to the cloud server. The work flow or Algorithm of the lightning prediction & Detection system with measurement of environment variables.As shown in above work flow the system starts and boots necessary modules and turns up the interface. Then it starts searching for any available network in the first place. It checks for any known network having SSID and password. Once the system is connected to internet then it starts reading for sensor data one by one through I2C interface to the MCU. Once MCU acquires required input from the sensor according to the user reference the formatting of the data begins. It aligns to the given data requirement and keeps it ready for the cloud API access. Once the data starts uploading to Cloud the side LCD display. To see the results at remote location, the operator hasto open a web browser and Login using his given username and password to Cloud Server. Thedata gathered from Raspberry pi is stored and respective graphs are plotted to analyze further study and Thunder prediction system is also possible by connecting a Thunder click sensorto Raspberry pi. This sensor covers a radius of 40Kms and predicts the approximate locationof thunder strike and alerts the people around the effective areas.

connection remains alive and continuously feeds the server for the cloud. At this point a Secondary Task begins in the background. This task governs only for AS3935 sensor. A background thread keeps on monitoring the lightning activity. If any detection triggers then the system calculates the distance to the storm and alerts the users in the particular area.

The system has inbuilt Wi-Fi connectivity. This embedded design will be able to connect to available Wi-Fi networks within the range and obtains IP address dynamically as user specified. Once system is connected over Wi-Fi the main program script has to invoke asynchronous API calls to POST the data on the cloud server. This API call is a discrete call as it is managed by secondary thread process and other threshold functions.

III. HARDWARE REQUIREMENTS

A. Raspberry Pi Zero W

It has Broadcom BCM2835 processor with clock speed is 1 GHz, Quad Core ARM 11 Processor with 40GPIO pins for Hardware Interface with inbuilt Wi-Fi connectivity. Raspberry Pi Zero W is a super-compact, hackable, and ultra-low-cost computer, and there is no so call clone version of this super low-cost computer, this is the original Raspberry Pi Zero W from Raspberrypi.org.

B. AS3935 Franklin Lightning Sensor

The Franklin Lightning Sensor™ is the world's 1st lightning sensing IC that was designed for low power, portable or fixed wire-line applications. Utilizing a sensitive RF receiver and integrated proprietary algorithm, the Franklin Lightning Sensor™ detects the electrical emissions from lightning activity and then provides for an estimation of the distance to the head of the storm from 40km away down to 1km, while rejecting disturbances from man-made signals such as motors and microwave ovens. This advanced warning capability alerts users so that the necessary

precautions can be taken to protect individuals and equipment from hazardous and deadly lightning strikes.

C. DHT11 sensor

The DHT11 is a basic, ultra-low-cost digital temperature and humidity sensor. It uses a capacitive humidity sensor and a thermistor to measure the surrounding air and gives out a digital signal.

D.BMP180 sensor

High precision Digital pressure sensor, measurement range of pressure 300 to 1100hpa (+9000m .500m relating to sea level), because of its ultra-low power, low voltage it is used in consumer electronics, PDAs, mobile phones, GPS .

F. Interfacing of all components to raspberry pi

navigation devices. BMP180 is designed to be connected directly to the Raspberry pi via the I2C bus.

E.MQ135 sensor

MQ-135 Module sensor has lower conductivity in clean air. When the target combustible gas exists, the sensors conductivity is higher along with the gas concentration rising. Convert change of conductivity to correspond output signal of gas concentration. MQ135 gas sensor has high sensitivity to Ammonia, Sulphide and Benzene steam, also sensitive to smoke and other harmful gases. It is with low cost and suitable for different applications such as harmful gases/smoke detection

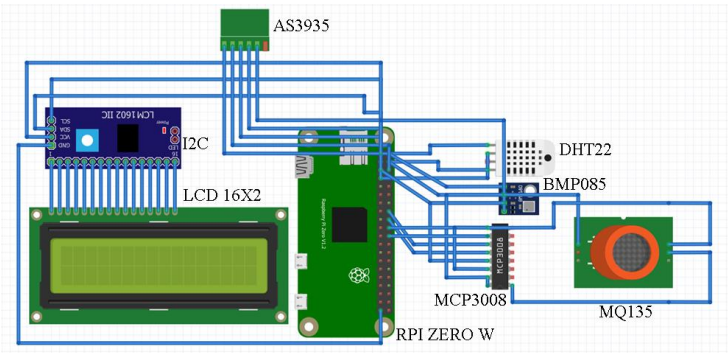

Fig 5: All sensor and actuator connections made to Raspberry pi zero

The above figure shows the complete interface connections on the microcontroller to the sensor network. This also contains actuators like LCD display. This display works on I2C protocol. All I2C enabled display should be connected to SDA – Data Line and SCL – Clock pin on Raspberry pi with the VDD as 3.3v and ground. The I2C protocols work only on 3.3V. One of the challenges to be faced here is the LCD display requires 5V of power supply as Input and I2C chip only allows 3.3V, Raspberry pi is a Digital system and doesn't accepts any analog signals. Here MQ135 is the gas sensor which returns Air Quality index value to the system. The sensor has a digital pin which will only returns 0 or 1 when Gas is detected or Not detected. The system needs a ADC to convert the analog value to digital. The system is connected to an ADC which is 8Bit. This 8Bit ADC is connected over SPI protocol to the microcontroller. This has 8 Channels over which 8 different analog sensors can be connected. The microcontroller now receives the digital signal from ADC that to followed from an analog sensor. DHT22 is a Digital sensor which directly returns digital value to the microcontroller. The sensor is a digital sensor and doesn't require any higher connection protocols like I2C or SPI. This sensor returns Digital value directly to the GPIO pin of Raspberry Pi.

Once the required script is developed in python and tested in offline mode then HTTP is introduced in the file. The python script has to import few library files likeURL-LIBRARY3 and REQUESTS library. This library is used for SMS Integration over APIand also used for uploading the field data to the IoT cloud server like Thingspeak, MQT etc..,it utilizes HTTP protocols like POST and GET to upload the data to the server in JSON format. This integration makes the system as an IoT device which makes it portable and remote accessible over Cloud server.

IV. EXPERIMENTAL RESULTS

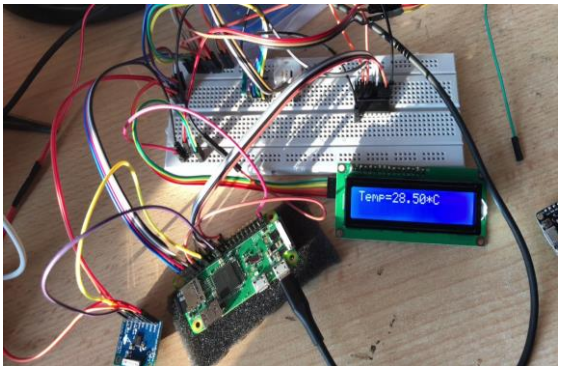

Fig 6: LCD display output

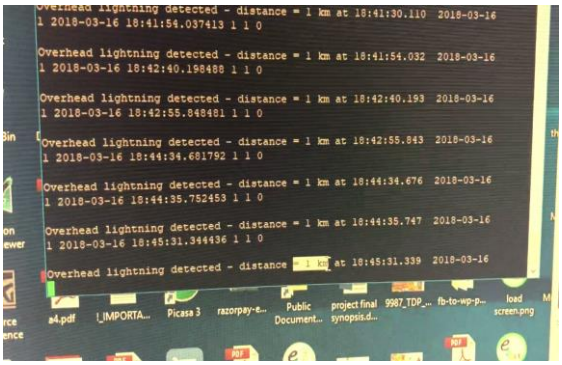

Fig 7: Console output for AS3935

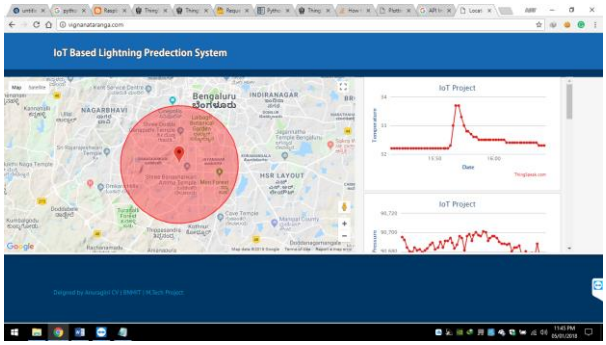

Fig 8: vignanataranga.com home page

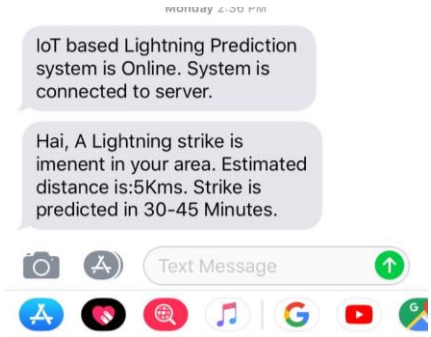

Fig 9: SMS received to the users

V. CONCLUSION

The project deals with designing a simple, highly efficient, cost effective and easy to operate Real time weather monitoring system using Raspberry pi to monitor various weather parameters of the desired location and transmit it to webpage created for remote monitoring & to LCD for local monitoring. Even Real time prior Thunder/Lightning prediction system detected successfully.

REFERENCES

[1]. Design and implementation of IoT system and equipment for lightning parameter monitoring by Daoru Pan ; Fan Wu ; Yuanan Liu ; Tingyan Zhang ; Jian Gao ; HanshengCai published at international journal IEEE **Print ISBN:** 978-1-5090-5184-7

[2]. Design and implementation of digital system for cost effective lightning detection sensor node by Nikhil B.gaikwad; Ajay kandare; Avinash.Gkeskar. Electronic ISBN: 978-1-5090-3038-5 IEEE

[3]. Design of Real-time Weather Monitoring System Based on Mobile Application using Automatic Weather Station by ArisMunandar*, HanifFakhrurroja, Muhammad IlhamRizqyawan, Rian Putra Pratama Electronic ISBN: 978-1-5386-0510-3 IEEE

[4]. AirSense: Opportunistic Crowd-Sensing based Air Quality monitoring System for Smart City by Joy Dutta, FirojGazi, Sarbani Roy and Chandreyee Chowdhury. 978-1-4799-8287-5/16/$31.00 ©2016 IEEE

[5]. IoT based Data Logger System for weather monitoring using Wireless sensor networks by Kondamudi Siva Sai Ram, A.N.P.S.Gupta International Journal of Engineering Trends and Technology (IJETT) – Volume 32 Number 2- February 2016

[6]. Internet of Things (IOT) Based Weather Monitoring system by Bulipe Srinivas Rao, Prof.Dr. K. Srinivasa Rao, Mr. N. Ome. International Journal of Advanced Research in Computer and Communication

Engineering ISO 3297:2007 Certified Vol. 5, Issue 9, September 2016

[7]. Multisensor Satellite Image Fusion and Networking for All-Weather Environmental Monitoring by Ni-Bin Chang, Kaixu Bai, SanazImen, Chi-Farn Chen, and Wei Gao. IEEE Print ISSN: 1932-8184

[8]. Thunderstorms and lightning Detection System using Hybrid Approach by Rasika V. Kalbende and Nitin A. Shelke. International Journal of Current Engineering and Technology E-ISSN 2277 – 4106, P-ISSN 2347 – 5161. Available at http://inpressco.com/category/ijcet

[9]. A World-Wide Low-Cost Community-Based Time-of-Arrival Lightning Detection and Lightning Location Network by EgonWanke, RichoAnderseny and Tobias Volgnandtz