International Journal of Research in Advent Technology, Special Issue, NCRCEST 2019
E-ISSN: 2321-9637
Available online at www.ijrat.org

Smart Bin Information System Using Lora

G.Harika[1],T.Prasanna[2],K.Bramaramba[3]

[1]*PG Student, Dept.of ECE, Stanley College Of Engineering & Technology for Women, Hyderabad, Telangana, India, Email:gharika58@gmail.com*
[2]*AssistantProfessor,Dept.ofECE,StanleyCollegeOfEngineering&TechnologyforWomen,Hyderabad,Telangana,India, Email:tprasanna@stanely.edu.in*
[3]*AssistantProfessor,Dept.ofECE,StanleyCollegeOfEngineering&TechnologyforWomen,Hyderabad,Telangana,India, Email:kbramaramba@stanely.edu.in*

Abstract*:* Nowadays, the Indian purpose is to makes sensible cities. For that, the most difficult downside is waste management for municipals that face serious pollution downside thanks to them passive quantities of waste. If solid waste is not than dried properly it's going to produce on several issues associated with human health and surroundings. Therefore there's a necessity of as a system that provides data regarding the filling of garbage elevator the bin. So that, the municipality will collect the waste from the bin before overflowing and helps to keep up the surrounding clean. This paper presents a temporary review on technology like Lora Module, IoT etc. The tallows to observe of garbage in real time and can inform to the licensed person on the rubbish it is about to fill. For sensible and ideal solid was assortment and transportation watching and management these technologies are ok to confirm for green surroundings.

Keywords : Smart Bin, Arduino Uno, GPS module, Lora Wireless Module 868MHz, IoT.

1. INTRODUCTION

At this gift state of affairs, the degree of production of municipal solid waste is incessantly increasing at in no time thanks to the increase in population, industrialization and alter inhabit and life form of the urban population [1]. The solid waste is thought about as house refusal and waste from industrial, business are non- hazardous solid waste and establishment like hospitals, market waste, yard waste, and street sweepings. This waste is thrown into municipal bins or waste assortment than by as assembling all that waste it's a dump into marketing areas or thrown into the landfills. However, either thanks to a lack of resource or deficiency waste and transport in restructures or different facilities, being vital to gather all waste and transport to the ultimate marketing places. If the management and categorization of the waste aren't done properly at this stage, it will cause serious impacts on human health and therefore. The issues to the Encompassing surroundings and become suns a unitary. The most issues of the present and solid waste as assortment and transportation method management system are Lack of the right system for watching the trucks, trash bins, rickshaws and homes and Lack of knowledge associated. With assortment time and space, Thanks to this Sub spatial its quantity of the overall solid management budget is exhausted on waste assortment and transportation. Through the big numbers of analysis are do know a completely different side of solid a waste management, however from them, few works are done then the won has been the watching. Then the Some areas as researchers mentioned regarding, then the Geographic Positioning System (GPS) radio frequency Identification (RFID) [2], waste assortment within watching application in are this that the researchers collect information victimization GSM/GPRS communication from the bin to the server, which incorporates GSM and GPRS property to every in inflicting an outsized increase of operating expense. The planned system uses it will be used wireless sensing it element network and might respond the as somebody throw waste within a bin [3]. The aim of this work is to the style a framework that may collect information on in standing in real-time that successively helps aim to optimize. The aim of this work is to the style assortment route ensuing reduced the operation. II.

2. EXISTING METHOD

The purpose of this project is to styles a low power consumption energy may be the saved by this project i.e., wireless device network for energy economical lightweight watching. This paper proposes a - Configuration and good association then is that integrates WSN, the IOT and Lora Module technology, and confirms its feasibleness in each theory and applies. The system configures lighting supported LDR data of reference points and it provides data concerning lighting for dominant devices. III.

3. PROPOSEDMETHOD

In this project, there are environmental sensors that save energy whenever the data enters then in step with that the data transmission can work. Primarily electrical devices are power hungry so it is as to be cut on back the ability consumption we have a tendency to be going for this project. Whenever the Ultrasonic device can activate so it is as to be cut on and then solely the device network is activated. Whenever the device values exceed, then the relevant operations are performed.

4. HARDWARESYSTEM

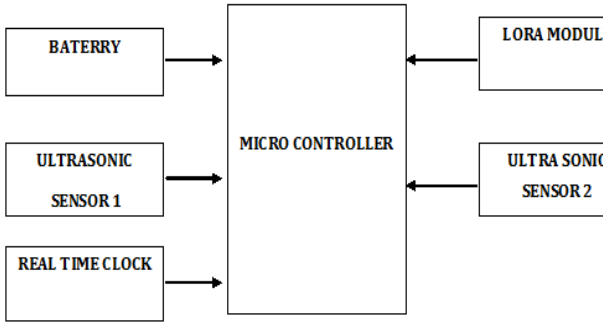

Fig: 1.Bin Secction

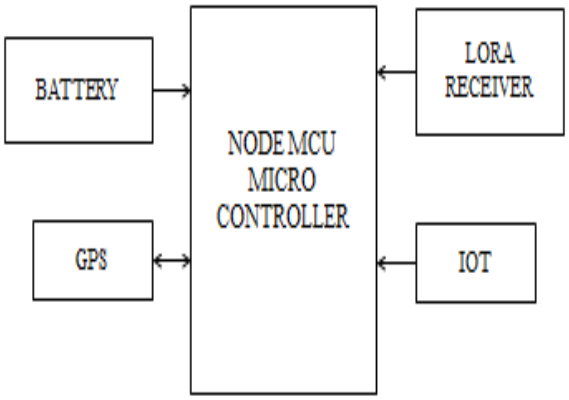

Fig: 2. Monitoring Section

4.1 Thegood Bin

The device node is mounted on the bin that composed it the good bin. Inaudible sensors are used for level measurement of garbage within the bin. Sensors composed it the good bin sent to and are the measured information to the entrance through angularity been then to a communication.

4.2 Gateway

The standing of the bin is sent to the management station gateway them the through to be the economic Sciatic of the entrance. The entrance passes this resolution it reduces this resolution reduces of them fifth in information and additionally stores to its own native then information at the management station. The utilization of them economic Sciatic and Medical (ISM) bands eliminate then it is a necessity of manipulator by victimization totally different technique of wireless communication, and this resolution reduces the fifth price.

4.3 Management Station

It receives real-time information rather like waste a level in as the very in through entrance then saved in information. It contains the central server that hosts the information. For been standing observation and operator interaction with the system, is having the interaction with the online primarily based program. More these information is it employed by the management station to feed programs is like optimization engines and routing as the land planning application.

5. INTEGRATEDTECHNOLOGY

5.1 LORA868MHZSX1276RFTx/Rx Module

The 868mhz sx1276 rf handsets include the loratx long range modem that gives ultra-long range spread range correspondence and high impedance resistance while limiting current utilization. utilizing lora tweak strategy it can accomplish an affectability of over -148dbm utilizing a minimal effort precious stone and bill of materials. the high affectability joined with the incorporated +20 db control intensifier yields industry driving connection spending making it ideal for any application requiring extent or power. lora additionally gives huge focal points in both blocking and selectivity over customary regulation procedures, tackling the conventional plan trade off between range, obstruction insusceptibility, and vitality utilization. these gadgets likewise bolster elite (g) fsk modes for frameworks including wmbus, ieee802.15.4g. the 868mhz sx1276 rf convey extraordinary stage commotion, selectivity, beneficiary linearity and iip3 for fundamentally bring down current utilization than contending gadgets..

5.2 *Ultrasonicsensor*

Ultrasonic Sensors find the rubbish level of bin supersonic sensors is used. precise to find little objects conjointly. It to be the transmit the wave at the particular frequency on the thing and when bouncing receives back. Then it calculates the fundamental measure values for transmittal and receiving the wave and if it with the assistance of that it's doable to measures the gap between sensors and

also the object. Presumptuous the all parameters and demand, and for level detection, it is enforced. HCSR04 usually used supersonic detector module which to may be found level starting from 2cmto4m.Itoperatesatafrequencyoffortyrates.

5.3 Microcontroller

Arduino Genuine Uno might be a microcontroller board bolstered the ATmega328P. It's fourteen advanced information/yield sticks about six simple sources of info, one UART for the sequential correspondence, sixteen rate quartz; it was as them the USB connection, an impact jack, Associate in Nursing ICSP header and a catch. It contains every one of that things that are required to help the microcontroller. By utilizing a USB link we can associate it. Relate in Nursing AC-to-DC connector or battery gives the office to. Amid this application, the learning gathering for example Dimension of trash in the receptacle isn't excessively touchy so it's customized in much the way that it'd the board then it was squandering power. first of all it will ascertain profundity them it was of the canister and set various force to state as twenty-five, 50, 75, and ninety %.

The detecting component will detect the dimension of waste once the beyond any doubt measure of your time that may allow the microcontroller. Thank occasional recognition the container it'll sparing the squandered vitality through sensors. So the be initiated exclusively once explicit interims of your time. In the event that pre-decided force is lesser than seen dimension, the information is going them the to be sent to direct station through Lora then the system. So this module is useful for any size of receptacle whose interims this detecting basic.

5.4 Node ESP8266 Microcontroller

ESP8266EX integrates antenna switches, RF balun, power amplifier, low noise receive amplifier, filters and power management modules the Wi-Fi functionalities, ESP8266EX also integrates an enhanced version of Ten silica's L106 Diamond series 32-bit processor and on-chip SRAM.It tends to be interfaced with outside sensors and different gadgets through the GPIOs. Programming Development Kit (SDK) gives test codes to different applications. Quick switch among rest and wakeup mode for vitality proficient reason; Adaptive radio biasing for low-control task Advance flag handling Spur wiping out and RF concurrence systems for normal.cell, Bluetooth, DDR, LVDS, LCD obstruction moderation

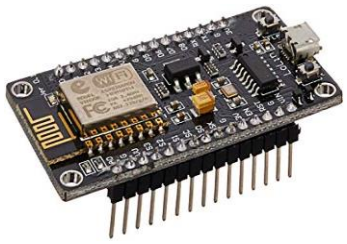

Fig: 3. NODE MCU ESP8266

6. FLOWCHART

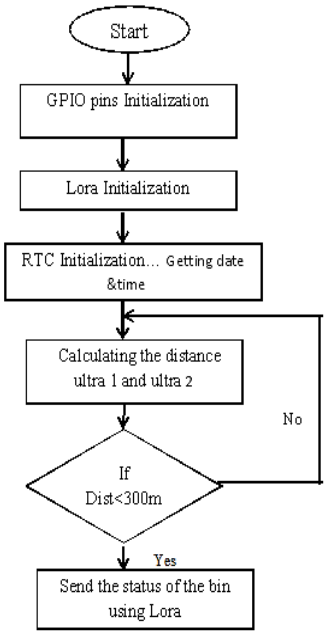

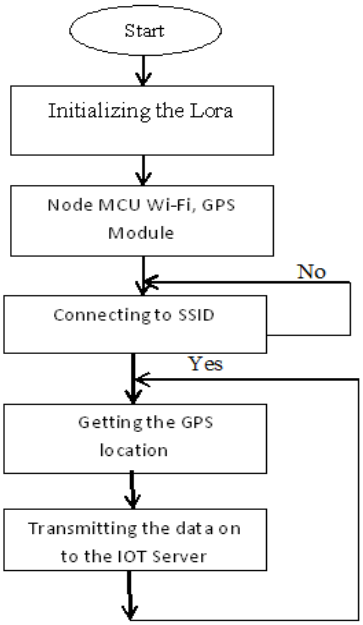

FIG: 4. flowchart for bin section and receiving

7. RESULT AND DISCUSSION

This model or technology is incredibly precise is for solid waste management them and observance system. And it's been with the success enforced. A Communication between one management stations 2 remote nodes is finished with the assistance of Lora. For representing real-time bin level within the graphical type we have a tendency and the graphical to used mat lab package and GUI was created in it. Management station receives the knowledge regarding bin level from a remote node. GUI that indicates real-time garbage level at the remote bin.

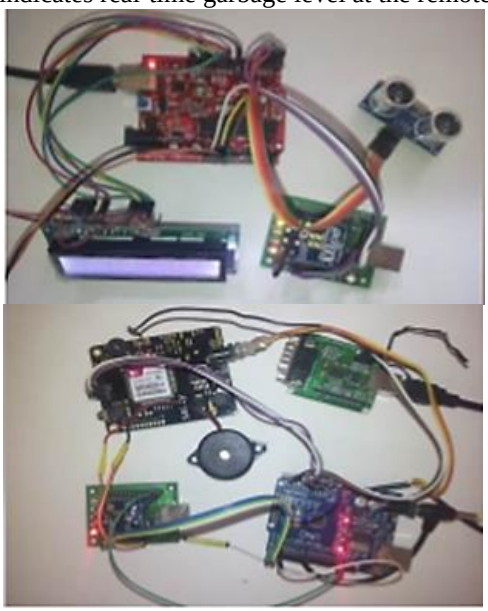

Fig: 5. Hardware Bins at Control Section

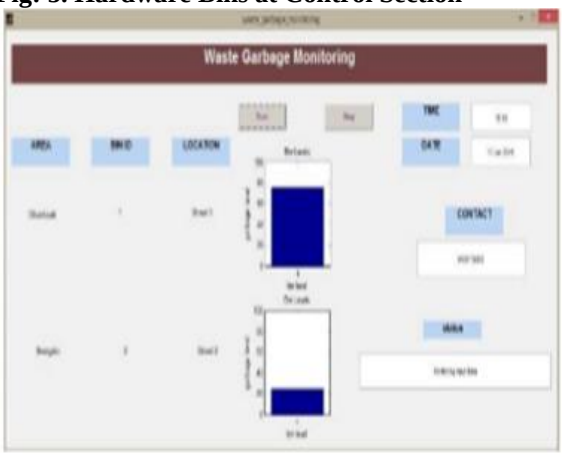

Fig: 6. GUI for waste garbage bin level monitoring

8. CONCLUSION

Concerning to management of Solid material Waste, we have the got examined totally as them to be the different technology however the conclusion of them aim of all of them are same in this technology differing it types of sensing elements to be in these project used like load sensor, IR sensor, etc. However unbearable sensors provide correct level watch.

In thus me technology GPS are enforced however position them of bins are mounted so it's going to become costly thus rather. Than victimization GPS we are able to inform the standing by causation the massage through the by victimization IoT at management stations. Here, we tend to used Lora component professional module to the is speak them it is server space over longer distances and them it was might offer real- time standing of the bin.

9. FUTURE SCOPE

For a future purpose of reading net server also can build for effective graphics program of a system and dominant action.

All bins are set up with the module GPRS enabled the embedded system. And data is transmitted from bins to the central server. It will store all necessary data like record of bin level history, what percentage times GPRS signal collect the rubbish etc.

1. It changes the optimization of a variety of vehicles used.
2. Additionally some application of smart phone is to be beneficial for voters to the municipal to the workplace.
3. Once all such a technology integrated along a brand new method of waste management system emerges. This may facilitate to scale back the number of garbage in town and helps to take care of the clean atmosphere.

REFERENCES

[1] https://www.collegedekho.com/colleges/courses-stanley-college-of-engineering-and-technology-for-women
[2] https://smartwaterjournal.springeropen.com/articles/10.1186/s40713-017-0005-y
[3] http://ijariie.com/AdminUploadPdf/Implementation_Of_Smart_City_Garbage_Management _ijariie5132.pdf
[4] https://businessimpactenvironment.wordpress.com/2011/10/03/environmental-issues-caused-by-rubber-industry/
[5] https://www.ijcaonline.org/archives/volume149/number4/ghate-2016-ijca-911393.pdf
[6] http://cdm.unfccc.int/methodologies/PAmethodologies/tools/am-tool-07-v6.pdf
[7] https://www.red-gate.com/simple-talk/sql/sql-tools/registered-servers-and-central-management-server-stores/
[8] https://www.indiamart.com/proddetail/lora-868mhz-sx1276-rf-transreceiver-module-rfm95w-compatible-19337791488.html

[9] https://www.alibaba.com/product-detail/Lora-House-Module-For-Wireless-Security_60772203486.html

[10] https://os.mbed.com/components/SX1276MB1xAS/

[11] https://www.digikey.com/en/product-highlight/s/semtech/sx1276-long-range-transceiver

[12] https://wholesaler.alibaba.com/product-detail/Sx1276imltrt-Ic-Rf-Txrx-Only-802_607835