International Journal of Research in Advent Technology, Special Issue, NCRCEST 2019
E-ISSN: 2321-9637
Available online at www.ijrat.org

Three Phase Fault Rectification Using Multifunctional Dynamic Voltage Restorer

Salava V Satyanarayana [1], I.Ranjith [2], K.Arun[3], N.Kiran Kumar[4]
Assistant Professor, EEE [1,], Hyderabad Institute of Technology & Management [1]
UG Scholar, EEE[2,3,4], Hyderabad Institute of Technology & Management[2,3,4]
Email: [1]pshve2011@gmail.com, [2] *ranjith.ilaveni@gmail.com*,[3] *arunrathod4748@gmail.com*

Abstract- The dynamics voltage restorer DVR is a modern device in distribution systems to protect the consumers in during the fault conditions and sudden change voltage amplitude emergency control in distribution system. It has been very important to improve the quality of power distributed to consumers. In this paper we are dealing with three phase faults rectification by using the dynamic voltage restorer and it will improve the power quality. The faults are divided into temporary or transient faults and permanent faults. The temporary faults may occur due to birds laying on the lines and tree falling on the lines. The permanent faults are due to short circuit on the line, eg., LL,LG,LLL . The three phase faults are most severe and less occur faults so we need to eliminate the three phase faults.

Index Terms- Dynamic voltage restorer (DVR), emergency control, three phase faults.

1. INTRODUCTION

The modern electrical distributions system consists of three functions power generation transmission and distribution in the form of alternating current. The power travel long distance through transmission lines and next given to the distribution lines and these will supplies the power to consumers. The fault in mean change in the voltage and current and distribution system in electrical apparatus. The fault in electrical system is damage in electrical equipment in during abnormal conditions which reduce the insulation strength between the conductors. The faults in the power system are divided into two types open circuit fault and short circuit fault. The open circuit fault mainly occurs in failure of one or two conductors. The open circuit fault take place in series with the line it is also called as series faults are affect the reliability of the system.

A symmetrical fault is give rise to symmetrical fault currents. Symmetrical fault current means current in all three phases such fault are called as symmetrical faults. There are two ways. Three phase fault or three phases shorted and three phase to ground fault. The three phase fault is occurring if two conductors of three phase system fall on the third conductors. Three phases to ground fault is this type of fault all the three conductors break on the ground. Asymmetrical faults is rise to fault current and fault current flowing in the three different phases such fault is called as asymmetrical faults. The performance of DVR in improves the quality of power in under different fault conditions.

2. PROPOSED SYSTEM

The DVR mainly consists of series connected isolation voltage injection transformer, a voltage source inverter, a output filter, and energy storage device that should be connected to dc link. Before giving the output of inverter to the injection transformer it must be filtered so that we can eliminate the harmonics due to switching function in the inverter. When there are no disturbances the DVR acts as short circuit to minimize losses. The DVR output depends on the switching accuracy of the pulse width modulation (PWM) and control scheme.

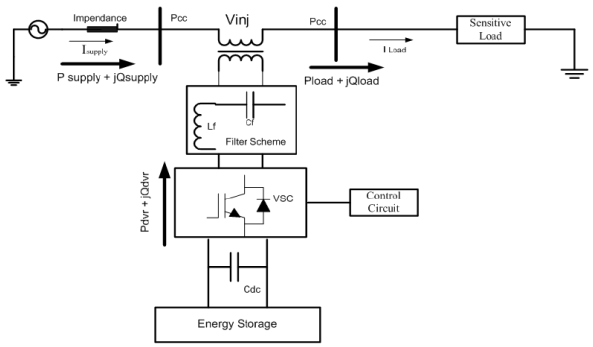

2.1. Voltage source converter:

VSC could be a 3 phase – 3 wire or 3 phase – 4 wire. it will inject the zero sequence voltages to the isolation transformer. Either a conventional two level converter or three level converter is used. The VSC is a power electronic device which is convert the DC voltage input into the AC voltage with required frequency, magnitude, and phase angle. In DVR application, the VSC is used to replace the missing supply voltage. Metal Oxide Semiconductor Field Transistors(MOSFET), Gate Turn-off thyristors(GTO),insulated gate bipolar transisors(IGBT) these are the main switching devices are used for switching purpose in VSC The VSC uses pulse width

modulation(PWM) technique while converting the voltage.

2.2. Injection Transformer

Three single phase transformers are connected in series with the distribution feeder and coupled to VSC to the higher voltage level. The transformer can connect with star/star or delta/star winding. If Y/Y connection with neutral grounded is used, the zero sequence voltage may have to be compensated. It is essential to avoid the saturation in the injection transformers.

2.3 LC Filter:

Filters are used to eliminate unwanted harmonics in generated output from VSI action by eliminating unwanted harmonics in the output we can achieve pure sinusoidal waveform. The filters can placed either on higher voltage side or the lower voltage side of the injection transformers.

2.4 Energy Storage:

The energy storage unit is used to store the energy in the form of dc with the help of batteries, superconducting magnetic energy storage(SMES) and super capacitor. This unit will provide active power to the load during voltage sags.

3. MULTIFUNCTIONAL DVR

The DVR can be used in the medium voltage level to protect the consumers from disturbances due to the fault current in system. When the fault occurred the fault current will flow through the DVR itself. In this case , the equipment can limit the fault current and protect the loads in parallel feeders until the breaker trips the circuit isolate the faulty section.The large value of current results the lower value of voltage at point of common coupling (PCC) this will damage the equipment connected to the bus.To limit the fault current the DVR itself acts as virtual inductance which does not take any real power from the battery and protect the DC link and battery. Here the virtual inductance value is fixed one. The PCC voltage is taken as reference and DVR acts as variable impedance. Then the absorption of real power is danger for battery and DC link capacitor.To solve the above problem an impedance is connected in parallel with the dc-link capacitor.

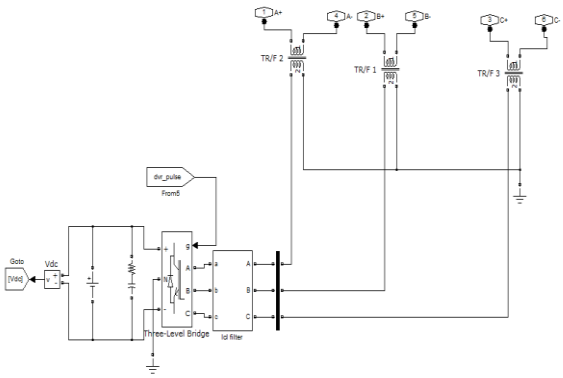

Fig2: DVR block diagram in MATLAB

4. CONTROL STRATEGY

The control strategy of is the multiloop controller using the posicast and p+resonant controllers are used to improve the transient response and eliminate the steady state error in DVR output. The voltage on source side of the DVR is compared with a load side reference voltage so that the necessary injection voltage is derived. But the transient oscillations are initiated at start of voltage sag. To improve damping the posicast controller can be used just before the DVR. To decrease the sensitivity the open-loop controller can be converted into a closed loop controller by adding a feedback path to the existing system.

5. MATLAB/SIMULINK Results

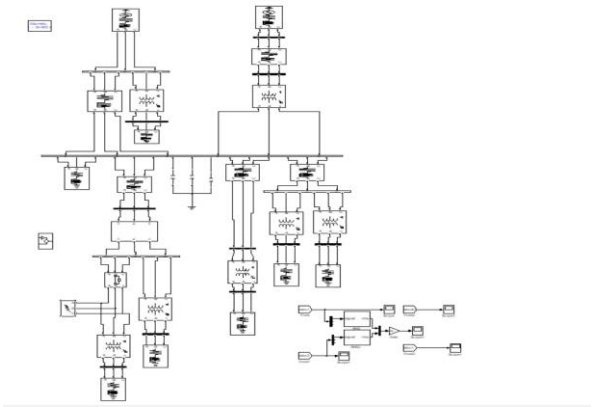

Fig: proposed multifunctional DVR

When fault occur in the system then some distortion are taken place in Input waveform so we need to inject the dvr with input voltage to eliminate the disturbances in the input waveform. After injecting the voltage the output is stabilized to pure sinusoidal wave form.

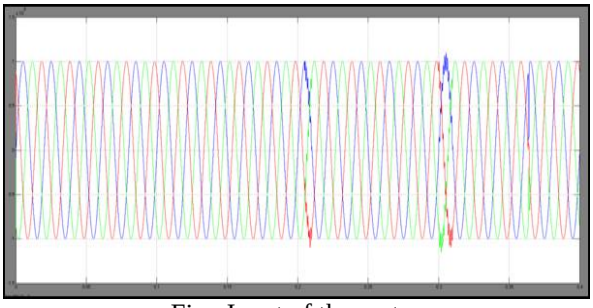

Fig : Input of the system

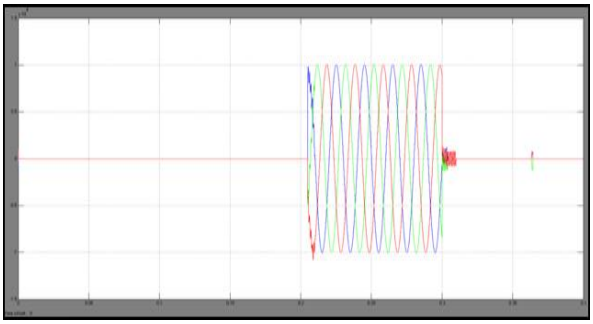

Fig : Injected pulse

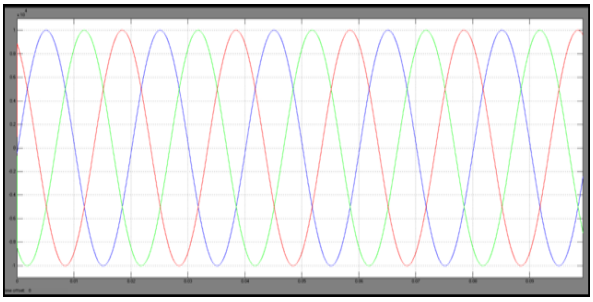

Fig : The output of the system after applying the dvr

6. CONCLUSION

In this paper, the multifunctional DVR is used, and the closed loop control is used to improve the damping of the output of the DVR response and Posicast and P+Resonant controllers are used to improve the transient response and eliminate the steady state errors in the system. In this paper the three phase faults are eliminated by using the DVR with control techniques. This will compensate the downstream faults currents caused by the three phase short circuits and it will protect the PCC voltage at bus.

REFERENCES

[1] Salava V Satyanarayana et al Int. Journal of Engineering Research and Applications www.ijera.com ISSN : 2248-9622, Vol. 4, Issue 1(Version 1), January 2014, pp.312-317.

[2] S. S. Choi, B. H. Li, and D. M. Vilathgamuwa, ―Dynamic voltage restoration with minimum energy injection,‖ IEEE Trans. Power Syst., vol. 15, no. 1, pp. 51–57, Feb. 2000.

[3] C. Fitzer, M. Barnes, and P. Green, ―Voltage sag detection technique for a dynamic voltage restore,‖ IEEE Trans. Ind. Appl., vol. 2, no. 1, pp. 203–212, Jan./Feb. 2004.

[4] Y. W. Li, D. M. Vilathgamuwa, F. Blaabjerg, and P. C. Loh, ―A robust control scheme for medium-voltage-levelDVR implementation,‖ IEEE Trans. Ind. Electron., vol. 54, no. 4, pp. 2249–2261, Aug. 2007.

[5] M. Vilathgamuwa, A. A. D. R. Perera, and S. S. Choi, ―Performance improvement of the dynamic voltage restorer with closedloop load voltage and current-mode control,‖ IEEE Trans. Power Electron., vol. 17, no. 5, pp. 824–834, Sep. 2002.