International Journal of Research in Advent Technology, Vol.2, No.2, February 2014

E-ISSN: 2321-9637

Design and Finite Element Analysis of JIGS and Fixtures for Manufacturing of Chassis Bracket

Sawita D. Dongre[1], Prof. U. D. Gulhane[2], Harshal C. Kuttarmare[3],

M.tech 3rd sem student[1]. Professor of Mechanical Department[2]. Assistant Professor of Mechanical Department[3] , S.S.P.A.C.E Wardha[1]. B.D.C.O.E. Sevagram[2]. D.M.I.E.T.R. Wardha[3].

Email: sawitadongre@gmail.com[1]

Abstract- This project is about the design and analysis of Jigs and fixture which is used in the manufacturing of chassis bracket of Bajaj car RE60 (passenger car).The purpose of the jigs is to provide strength, holding, accuracy and interchangeability in the manufacturing of product. By performing analysis on jigs and fixtures we find out stress acting on jigs and fixtures and bracket. The jigs and fixtures are the economical ways to produce a component in mass. So jigs and fixtures are used and serve as one of the most important facility of mass production system. These are special work holding and tool guiding device. What makes a fixture unique is that each one is built to fit a particular part or shape. The main purpose of a fixture is to locate and in the cases hold a work piece during an operation. A jig differs from a fixture in the sense that it guides the tool to its correct position or towards its correct movement during an operation in addition to locating and supporting the work piece. So in this project we will design jigs and fixtures while manufacturing of chassis bracket and analyzing stress and strain developed in jigs and fixtures and chassis bracket. In this we will minimize the different problem of breakage of jigs and fixtures.

Index Terms- Jigs and fixtures; FEM; Hydraulic press machine.

1. INTRODUCTION

Jigs and fixtures are special purpose tools which are used to facilitate production (machining, assembling and inspection operations) when work pieces are to be produced on a mass scale. The mass production of work pieces is based on the concept of interchangeability according to which every part will be produced within an established tolerance. Jigs and fixtures provide a means of manufacturing interchangeable parts since they establish a relation, with predetermined tolerances, between the work and the cutting tool. They eliminate the necessity of a special set up for each individual part. Once a jig or fixture is properly set up, any number of duplicate parts may be readily produced without additional set up. Hence jigs and fixtures are used.

The jigs and fixtures are the economical ways to produce a component in mass. So jigs and fixtures are used and serve as one of the most important facility of mass production system. These are special work holding and tool guiding device. Quality of the performance of a process largely influenced by the quality of jigs and fixtures used for this purpose. What makes a fixture unique is that each one is built to fit a particular part or shape. The main purpose of a fixture is to locate and in the cases hold a work piece during an operation. A jig differs from a fixture in the sense that it guides the tool to its correct position or towards its correct movement during an operation in addition to locating and supporting the work piece. Jigs and fixtures are production tools used to accurately manufacture duplicate and interchangeable parts. Jigs and fixtures are specially designed so that large numbers of components can be machined or assembled identically, and to ensure interchangeability of components.

A jig may be defined as a device which holds and positions the work, locates or guides the cutting tool relative to the work piece and usually is not fixed to the machine table. It is usually lighter in construction. A fixture is a work holding device which only holds and positions the work, but does not in itself guide locate or position the cutting tool. The setting of the tool is done by machine adjustment and a setting block or by using slip gauges. A fixture is bolted or clamped to the machine table. It is usually heavy in construction. Jigs are used on drilling, reaming, tapping and counter boring operations, while fixtures are used in connection with turning, milling, grinding, shaping, planning and boring operations. A simple jig and a fixture are shown in Fig.

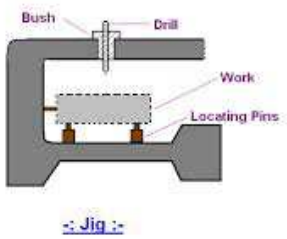

Fig.1. Jig

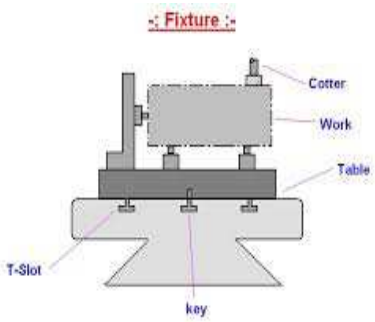

Fig.2. Fixture

This project is about the design and analysis of Jigs and fixture which is used in the manufacturing of chassis bracket of Bajaj car RE60 (passenger car).The purpose of the jigs is to provide strength, holding, accuracy and interchangeability in the manufacturing of product. By performing analysis on jigs and fixtures we find out stress acting on jigs and fixtures and bracket.

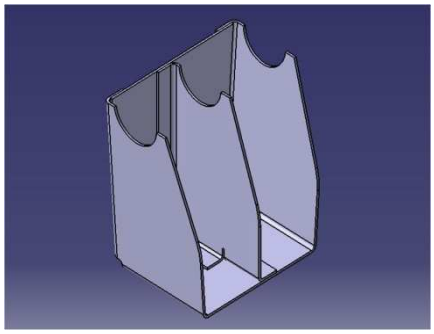

Fig.3. Chassis Bracket

Fundamental principles of Jigs and Fixtures design:

- **Reduction of Idle Time**: Design of Jigs and Fixtures should be such that the process, loading, clamping and unloading time of the work piece takes minimum as far as possible.
- **Weight Of Jigs And Fixtures**: It should be easy to handle, smaller in size and low cost in regard to amount of material used without sacrificing rigidity and stiffness.
- JIGS PROVIDED WITH FEET: Jigs sometimes are provided with feet so that it can be placed on the table of the machine.
- **Materials For Jigs And Fixtures**: Usually made of hardened materials to avoid frequent damage and to resist wear. Example-MS, Cast iron, Die steel, CS, HSS.

Purpose and Advantages of Jigs and Fixtures:

Following the purpose and advantages of jigs and fixtures:

(a) It reduces or sometimes eliminates the efforts of marking, measuring and setting of work piece on a machine and maintains the accuracy of performance.

(b) The workpiece and tool are relatively located at their exact positions before the operation automatically within negligible time. So it reduces product cycle time.

(c) Variability of dimension in mass production is very low so manufacturing processes supported by use of jigs and fixtures maintain a consistent quality.

(d) Due to low variability in dimension assembly operation becomes easy, low rejection due to les defective production is observed.

(e) It reduces the production cycle time so increases production capacity. Simultaneously working by more than one tool on the same work piece is possible.

(f) The operating conditions like speed, feed rate and depth of cut can be set to higher values due to rigidity of clamping of work piece by jigs and fixtures.

LITERATURE REVIEW

J. C. Trappey and C. R. Liu- This paper gives a review of fixture-design research, most of it done in the 1980s. the major topics of the review are the fixturing principals (supporting ,locating and clamping), automated fixtures design (configuration, assembly and verification) and fixtures hardware design (delicated, modular and electric /magnetic type).

Taufik, R.S.*, Hirmanto, S., Sivarao, Hambali, A., and Tajul, A.-This paper presents the design of jigs and fixtures for hydraulic press machine in manufacturing industries. The current problem in industry is facing the utilization of hydraulic press machine when the demand has increased which occurs on the gripping or holding the work piece securely. The main objective of this study is to propose a new design of jigs and fixtures for hydraulic press to carry out the gripping problem from existing design. Several design concepts were generated and simulated to analyze using ANSYS software. The design parameters such as maximum deformation, maximum shear stress, number of contact faces, and maximum holding force were presented. Based on the simulation result, the improvement of new jigs and fixtures design for hydraulic press machine was achieved.

Shrikant.V.Peshatwar* L.P Raut- This paper present a fixture design system of eccentric shaft for ginning machine.. Fixture is required in various industries according to their application. Designer design fixture according to dimension required by industry to fulfill our production tar gate. In traditional manufacturing process performing operation on eccentric shaft is critical. so holding a work piece in proper position during a manufacturing operation fixture is very necessary and important. Because the shaft is eccentric so for this requirement of manufacturing process Designer design proper fixture for eccentric shaft. Fixtures reduce operation time and increases productivity and high quality of operation is possible.

RESEARCH METHODOLOGY

- Study detail literature review.
- Study of jigs and fixtures used for chassis bracket.
- Study of press machines.
- Modeling of chassis bracket.
- Design and Modeling of jigs and fixtures.
- Meshing of CAD model.
- FEM analysis of jigs and fixtures and chassis bracket.

REFRENCES

[1] Trappey, J. C. and C. R. Liu, (1990): A LITERATURE SURVEY OF FIXTURE DESIGN AUTOMATION, Int J Adv Manuf Technol **5**. (240-255).

[2] Taufik, R.S.; Hirmanto, S.; Sivarao, Hambali, A. and Tajul,A. A., (2012): Design of Jigs and Fixtures for Hydraulic Press Machine" Malikussaleh Industrial Engineering Journal Vo.1 No.**1** (19-24) ISSN 2301 934X.

[3] Peshatwar S.V. and Raut L.P., (February 2013): Design and Development of Fixture for eccentric shaft: A Review, International Journal of Engineering Research and Applications (IJERA) ISSN: 2248-9622 www.ijera.com Vol. 3, Issue **1**, January –pp.1591-1596.

[4] Hoffman, E. G., (2003): Jig and fixture design. United State of America: Delmar Learning.

[5] Nee, A. Y.; Tao, Z. J. and Kumar, A. S. (2004): An advanced treatise on fixture design and planning, Volume 1. Singapore: World Scientific Publishing.

[6] Gandhi, M., and Thompson, B., (1986): Automated Design of Modular Fixtures for Flexible Manufacturing Systems. Journal of Manufacturing Systems, 1986, (243-252).

[7] Jiang, W.; Wang, S., and Cai, Y. (1988): Computer-aided Group Fixture Design Annals of the CIRP. (145-148).

[8] Markus, A., (1988): Strategies for the Automated Generation of Modular Fixtures. ASME Proc. Manufacturing International '88 Symposium Manufacturing Systems: Design, Integration and Control, (97-103).