International Journal of Research in Advent Technology (E-ISSN: 2321-9637) Special Issue
International Conference on Technological Advancements in Structures and Construction
"TASC- 15", 10-11 June 2015

Seismic Behavior of Inverted Spherical Shell Foundations

Syed Jalaludeen Shah[1], Sameena Khalid[2]
Civil Engineering[1, 2], Professor and Head of Department [1], P.G. Student [2], Universal Engineering College, Vallivattom, Thrissur, Kerala, India.
Email: syedjshah@gmail.com [1], sameenakhalid91@gmail.com[2]

Abstract- Foundations should be structurally strong to resist the distress, bearing capacity failure and excessive settlement due to earthquakes. Shallow foundations which are generally the first preference in foundation design under favorable conditions are generally more vulnerable to earthquake damage. Among shallow foundations, shell foundations are expected to perform better as they are an economic alternative to plain foundations where heavy super structural loads are to be transmitted to weaker soils. Considering the aspects of a shell foundation, the seismic performance of the inverted spherical shell foundation were investigated by varying rise of shell (considering different semi-vertical angles) with different contact conditions in both the clayey and sandy soils using finite element software ANSYS. Seismic performance of inverted spherical shell foundation and circular footing was compared, considering the Acceleration-time history of Kobe Earthquake of Japan in 1995. The results give a clear indication of the advantages offered by the inverted spherical shell foundations over the circular footings in resisting the earthquake stresses. It was also found that the rise of shell foundation, shell-soil contact condition and soil properties have a greater influence in the performance of an inverted spherical shell foundation. The semi-vertical angles which gives the best performance in terms of reduced settlement and stress was also obtained.

Index Terms- Inverted Spherical Shell, Semi-vertical Angle, Earthquake Loading.

1. INTRODUCTION

Every civil engineering structure in general will have a superstructure and a foundation. The purpose of providing foundations is to transmit the load of superstructure safely and economically to the underlying soil by serving as a media between the structure and soil without affecting the stability of adjacent structures. During earthquakes, the foundations should be structurally strong to resist the distress and excessive settlement.

The performance of shells in roof structures initiated the idea of using shells as foundations. Shell foundations are economic alternatives to traditionally plain shallow foundations especially where heavy super structural loads are to be transmitted to weaker soils, or for towers subjected to high lateral forces due to wind or earthquake loads. The overriding virtue of shell foundation is its capacity to distribute loads with an economy of materials and without introducing excessive bending moments and shearing stresses into foundation structure.

The performance of shell foundations as a supporting element mainly depends upon their geometrical shape, quality of construction materials used and streamlined continuity to induce strength and perform efficiently in soil. The major challenge of a shell foundation is its non-planar and curved interface surface existing between the shell and soil. The design of shell foundation is based on the membrane theory and ultimate strength theory. Membrane theory helps to determine the membrane stresses as a function of the soil reaction and geometry of shell, while ultimate strength theory provides the maximum load that a foundation can sustain under a given set of loading conditions.

Due to its circular plan, the use of spherical shell footing is restricted to an isolated footing only and inverted dome footing for circular arrangement of columns. It does not possess the straight-line property which makes its construction process more costly and complex. Sector of spherical shell in inverted position can serve as rafts for cylindrical structures such as water tanks, silos, etc. which are supported on a circular row of columns located on the perimeter of a ring beam. It can serve as an economic alternative to thick circular or annular raft foundations. They generally have uniform loading effects than that of the plain counterpart.

The important findings obtained from literature concludes that the shell foundation when subjected to both horizontal and vertical load the bearing capacity decreases, but that decrease is very much less compared to flat footings[7]. Shell foundations are admirably suited to resist small eccentricities of applied load, even when they are designed for central vertical loads[8]. Membrane theory is a conservative aid in the design of these shell foundations in static

loading case[9]. Ultimate strength gains rapidly with the rise in the initial range then followed by a slower increase[1]. In some cases the inverted shell has better load carrying capacity than shell in upright position[2] [5] [11]. Rise to radius ratio of shell footings have an influence on the seismic resistance.

The predominant membrane compression in both the meridional and hoop directions makes the spherical sectors an extremely efficient shell form to use in foundations[12]. The rise corresponding to a semi-vertical angle of 45º is desirable in terms of design and construction[1] and for spherical shell it is limited to 45º [8]. In the numerical analysis, glued contact surface of shell footings shows perfect soil-structure interaction and better performance under seismic conditions[13]. Most studies reached the same conclusion concerning the saving achieved in the construction materials[4] [14] and the good structural performance of the shell footing[11].

Shell foundations which are shallow in nature are weaker than deep foundations and are more vulnerable to failure under unexpected loading. Shell is supposed to be structurally strong than other shallow foundations and by virtue of its shape, it is able to take high load[3]. Even though shells are safe under vertical load, when a horizontal force (earthquake) comes, the tendency of shell to break is more. This project aims to for see these conditions and give a solution by finding the applicability of inverted spherical shell foundations in seismic areas.

2. EARTHQUAKE GROUND MOTION

Time history method of dynamic analysis (transient analysis) considering the acceleration-time history of Kobe earthquake (1995) was adopted in the present study. Acceleration-time history of Kobe earthquake having duration of 40.96 seconds, Richter magnitude of 6.9 and characteristics peak ground acceleration of 2.386 m/sec^2 at 15.16 second is given in Fig. 1.

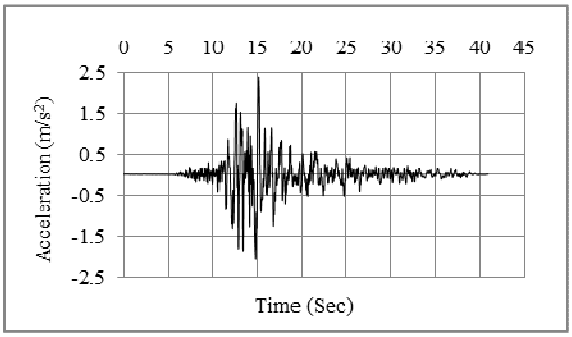

Fig. 1. Acceleration-time history of Kobe earthquake

Kobe earthquake produced significant damages to the buildings due to failure of underlying soil. This highlighted the fact that the seismic behavior of a structure is influenced not only by the response of superstructure, but also by the response of foundation and ground.

Only the initial 20 seconds of seismic excitation was considered for the present study, since the duration of the earthquake was large and the memory as well as the time required for the computer to conduct the dynamic analysis is high.

3. DESCRIPTION OF SHELL AND SOIL

The geometry of finite element models and properties of materials used in the present study are discussed below.

3.1. *Shell and soil geometries*

The dimensions of inverted spherical shell foundation considered in the study were fixed with reference to the design plate 6.2 given by Kurian (2006). The design was done for 6000 kN load, using membrane theory considering some details from IS: 9456 – 1980. In the present study the inverted spherical shells of a constant segment diameter 12 m were adopted varying only the semi-vertical angle of the inverted spherical shells leading to change in the rise of the shells. The shell models created are shown in Fig. 2.

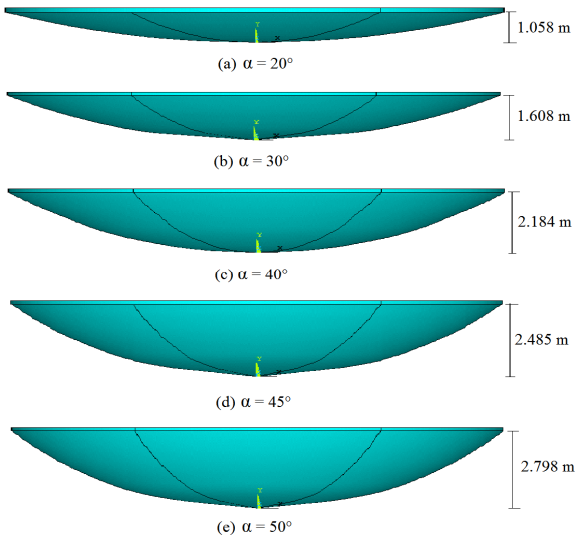

Fig. 2. Model of inverted spherical shells

The details of the circular footing and inverted spherical shell foundations used in this study are given in Table 1 and Table 2 respectively. The dimensions of shell having 40º semi-vertical angle as well as the surrounding soil are also shown in Fig. 3.

Table 1. Dimension details of circular footing.

Diameter (m)	Overall thickness (m)
12	1.573

Table 2. Dimension details of inverted spherical shells.

Semi-vertical angle, α	Rise of shell, f (m)	Rise to radius ratio, f/a	Overall thickness of shell, t (m)	Ring beam dimension, b x d (m x m)
20	1.058	0.176	0.16	0.97 x 0.97
30	1.608	0.268	0.12	0.72 x 0.72
40	2.184	0.364	0.12	0.64 x 0.64
45	2.485	0.414	0.12	0.58 x 0.58
50	2.798	0.466	0.12	0.54 x 0.54

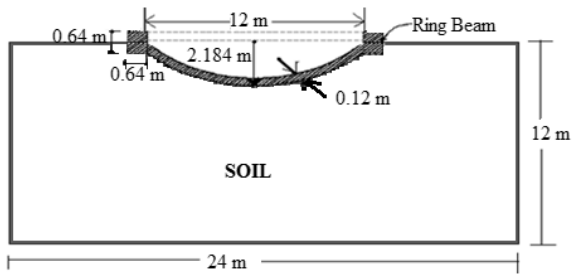

Fig. 3. Dimensions in sectional view

The size of soil block was fixed from the free field response studies conducted in previous works[12] as well as memory and time requirement for solving the analyses on the computer. The minimum diameter of the soil cylinder thus adopted is 24 m (corresponding to twice the diameter of shell) and depth of the soil cylinder considered is 12 m from bottom of shell (corresponding to the diameter of shell).

3.2. *Concrete and soil properties*

Concrete is defined as multi-linear isotropic material which uses Von-Mises failure criterion. To properly model the M20 grade concrete, linear isotropic and multi-linear isotropic material properties are defined and are tabulated in Table 3.

Table 3. Properties of concrete.

Sl. No.	Concrete properties	Value
1	Modulus of elasticity, E_c	2.236×10^7 kN/m^2
2	Poisson's ratio	0.15
3	Density	2400 kg/m^3
4	Shear transfer coefficient for open crack, β_t	0.2
5	Shear transfer coefficient for closed crack, β_c	0.9
6	Uniaxial tensile cracking stress, f_t	3.13×10^3 kN/m^2
7	Uniaxial crushing stress, f_c	25×10^3 kN/m^2

The material properties adopted for soil which is an elasto plastic constitutive Drucker-Prager model in the present study are given in Table 4.

Table 4. Properties of soil.

Sl. No.	Properties	Homogeneous Soil Condition	
		Loose Sand	Soft Clay
1	Modulus of elasticity, E_c (kN/m^2)	25×10^3	4×10^3
2	Poisson's ratio	0.3	0.3
3	Density (kg/m^3)	1800	1700
4	Cohesion (kN/m^2)	0	25
5	Angle of internal friction	30	0
6	Dilatancy angle	10	0

4. ANSYS FINITE ELEMENT MODELING

This research was conducted using finite element software ANSYS version 15 for modelling, solving and post processing. ANSYS is a commercial, sophisticated and comprehensive finite element software with capability to analyze a wide range of problems like static structural, nonlinear, thermal, mechanical, implicit and explicit dynamics, fluid flow, etc. Like any finite element software, ANSYS solves governing differential equations by breaking the problem into small elements.

In this project, ANSYS was used as an integrated program with all operations performed under one GUI. Creating the model, running it, and post processing the results are all done without leaving the ANSYS environment. In the Pre-processor, a model can be built and modified and also loads and constraints can be applied. In the Solution phase, the type of analysis to be performed can be specified. The results of an analysis can be viewed in the General Postprocessor as well as Time History Postprocessor.

4.1. *Concrete element type*

Concrete was modeled in ANSYS by a solid element, SOLID65, which has eight nodes with three degrees of freedom per node, i.e., translations in x, y, and z directions. SOLID65 can be used for 3D modeling of solids with or without reinforcing bars. This element has the capabilities of cracking, crushing and deforming plastically. Usually the concrete simulations with this element are very accurate. For reinforced concrete modeling, solid capability of this

element was used to model the concrete while the rebar capability of element was used for modeling reinforcement behavior. A typical discretized model of 40^0 semi-vertical angled inverted spherical shell in loose sand having bonded contact is shown in Fig. 4.

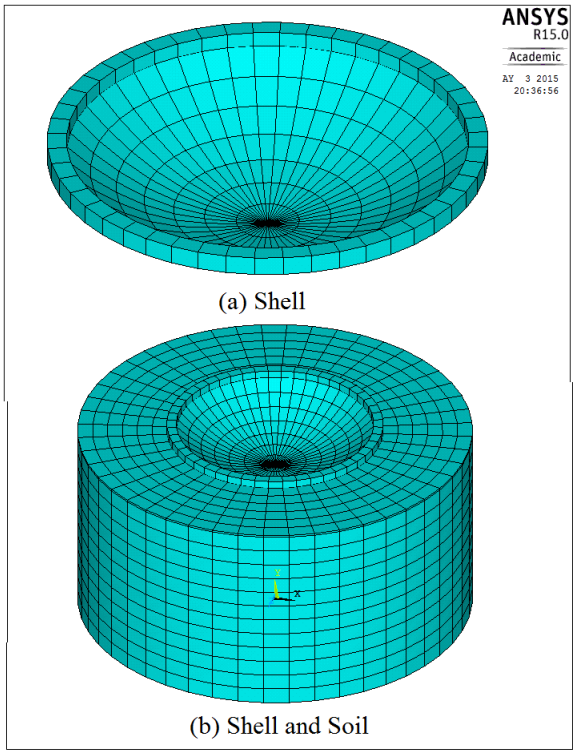

Fig. 4. Discretized model

4.2. *Reinforcement modeling*

Modeling of steel reinforcement in ANSYS can be done by one of either discrete or embedded or smeared method. In this work the analyses have been done with smeared model, because the mesh was done with big finite elements and no individual bars could be inserted. In the smeared method, it is assumed that reinforcement is uniformly spread throughout the concrete element in a defined region of the finite element mesh. This approach is used for large-scale models where the reinforcement does not significantly contribute to overall response of the structure.

Solid 65 element has the capability of adopting smeared method by allowing to enter 3 reinforcement bar materials in concrete, each material corresponding to x, y and z directions of the smeared element. For this model, parameters to be considered are material number, volume ratio and orientation angles θ and Φ, in x and y directions respectively. Volume ratio refers to the ratio of steel to concrete in element.

4.3. *Contact*

Usually the soil-structure interaction analyses assume a perfect bond on contact surface. But in the actual system, the separation and sliding phenomena may occur during strong earthquake motion, and its response will be greatly different from the response with a perfect bond assumption at the interface. Contact elements introduced to study the interface or friction at the interface brings nonlinearity in the analysis. Convergence is a major issue with contact elements.

Contact occurs when the element surface penetrates one of the target segment elements on a specified target surface. The area between the inverted spherical shell foundation and soil was made TARGE170 to define the surface for the contact element. CONTA174 is used to represent contact and sliding between 3D target surfaces TARGE170 and a deformable surface, defined by this element. Here the analysis were conducted with two extreme cases of perfect bonding and smooth conditions to give the limiting results.

5. SEISMIC ANALYSIS

Based on the type of external action and behavior of structure, the analyses can be linear static, linear dynamic, nonlinear static and non-linear dynamic analyses.

Every structure acts statically and dynamically when subjected to displacements or loads. In dynamic analysis, the structure is governed by the additional inertia forces produced by the acceleration loads applied over small time interval. These inertia forces form a significant portion of load equilibrium by the internal elastic forces of the structure. In addition, a damping factor contributes significantly to the structural response.

Transient dynamic analysis is a technique used to determine the dynamic response of a structure under a time-varying load. In dynamic analysis the disturbance travels as a wave in ground affecting very large area, contrary to static case where load influence is confined to a limited area around application of point load. Transient dynamic analysis can be done either by full method or reduced method or mode superposition method. In this work the transient analyses were done as full method. The nonlinearities can include plasticity, stress stiffening, deflection, strain, hyper elasticity, contact surfaces, creep.

6. RESULTS AND DISCUSSIONS

The influence of varying semi-vertical angle leading to change in rise of shell, the soil condition and the interface roughness on the seismic response of the inverted spherical shell foundation has been studied in terms of displacement, and resultant stress. A comparative study of the results is also conducted and presented.

By conducting modal analysis it was seen that there is no chance of resonance in the inverted spherical shell foundations and circular footings modeled for the Kobe earthquake considered. Nonlinear transient dynamic analysis was done for the models of inverted spherical shell foundation and circular footing embedded in loose sand as well as soft clay for both bonded and smooth contact conditions by providing fixity at bottom of soil.

6.1. *Displacement Results*

A typical plot of the displacement-time graph obtained for the analysis of 40^0 semi-vertical angled inverted spherical shell in loose sand having bonded contact is shown in Fig. 5. From the displacement-time graph, the maximum displacements obtained for the inverted spherical shell foundations and circular footing due to the earthquake are tabulated in Table 5 and Table 6 respectively.

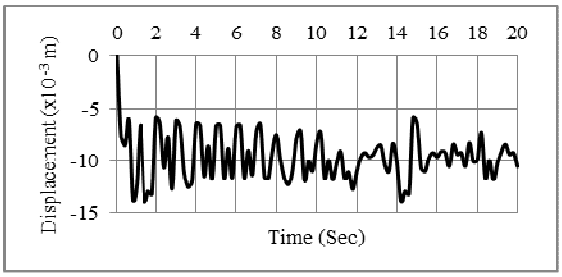

Fig. 5. Displacement-time graph of 40^0 inverted spherical shell foundation.

Table 5. Displacement of shell foundations.

Semi-vertical angle	Displacement in loose sand (m)		Displacement in soft clay (m)	
	Bonded contact	Smooth contact	Bonded contact	Smooth contact
20º	0.01001	0.01265	0.01569	0.01693
30º	0.01249	0.01634	0.02079	0.02712
40º	0.01387	0.01872	0.02688	0.04273
45º	0.01703	0.02972	0.03798	0.05225
50º	0.02383	0.03464	0.05494	0.06779

Table 6. Displacement of circular footing.

Displacement in loose sand (m)		Displacement in soft clay (m)	
Bonded contact	Smooth contact	Bonded contact	Smooth contact
0.01829	0.03164	0.04395	0.05582

Results shows that for shells having semi-vertical angle more than 45º displacement have a higher value than the circular footing in both clay and sand considered. Performance of shell in smooth condition is poor compared to bonded condition.

It can also be noted that when semi-vertical angle changes from 20^0 to 30^0, 30^0 to 40^0, 40^0 to 50^0, the percentage difference in displacement for shells in sand with bonded contact are 19.92, 9.88, and 41.82% respectively, for shells in sand with smooth contact are 22.61, 12.69, and 45.96% respectively, for shells in clay with bonded contact are 24.50, 22.66, and 51.08% respectively and for shells in clay with smooth contact are 37.56, 36.53, and 36.98% respectively.

6.2. *Stress Results*

A typical plot of the stress-time graph obtained for the analysis of 40^0 semi-vertical angled inverted spherical shell in loose sand having bonded contact is shown in Fig. 6. From the stress-time graph, the maximum stresses obtained for the inverted spherical shell foundations and circular footing due to the earthquake are tabulated in Tables 7 and 8.

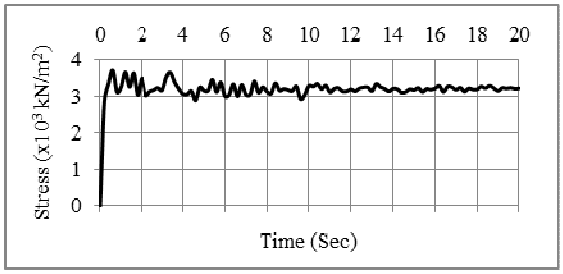

Fig. 6. Stress-time graph of 40^0 inverted spherical shell foundation.

Table 7. Stress in shell foundations.

Semi-vertical angle	Stress in loose sand (kN/m^2)		Stress in soft clay (kN/m^2)	
	Bonded contact	Smooth contact	Bonded contact	Smooth contact
20º	2323	2543	2783	3261
30º	3298	4819	5223	6438
40º	3667	5482	5999	6871
45º	4144	6476	6229	9258
50º	4558	7343	8396	11690

Table 8. Stress in circular footing.

Stress in loose sand (kN/m^2)		Stress in soft clay (kN/m^2)	
Bonded contact	**Smooth contact**	**Bonded contact**	**Smooth contact**
4430	5764	5292	7071

From the results it can be noted that the stresses for bonded contact is more than the smooth contact.

As in the case of displacement, for inverted spherical shells having semi-vertical angle more than 45º a higher value of stress was seen than that in the circular footing (for both clay and sand).

It can also be noted that when semi-vertical angle changes from 20^0 to 30^0, 30^0 to 40^0, 40^0 to 50^0, the percentage difference in stress for shells in sand with bonded contact are 29.56, 10.06, and 19.57% respectively, for shells in sand with smooth contact are 47.23, 12.09, and 25.34% respectively, for shells in clay with bonded contact are 46.72, 12.94, and 28.55% respectively and for shells in clay with smooth contact are 49.35, 6.30, and 41.22% respectively.

7. CONCLUSIONS

Seismic performance of the inverted spherical shell foundation was compared with circular footing by conducting transient dynamic analysis using ANSYS software. The influence of rise of the shell (considering different semi-vertical angles) with different contact conditions in both the clayey and sandy soils were determined in terms of displacement and stress. However the conclusions of the study cannot be generalized as they are applicable only to the specific data used in the analysis. The results of the present study shows that :

(1) It is better to adopt inverted spherical shells having semi-vertical angle less than 45º for any type of soil even if it is clay or sand.

(2) Bonded contact surface of shell footings shows perfect soil-structure interaction and better performance under seismic conditions than the smooth contact surface.

(3) Considering the percentage difference of displacement as well as stress it is better to adopt inverted spherical shells of semi-vertical angles in between 30º and 40º having f/a ratio ≤ 0.4.

It is concluded that the inverted spherical shell foundations having semi-vertical angle less than 45º have better performance than the circular footing with different contact conditions in both the clayey and sandy soils.

REFERENCES

[1] Al-Ausi, M. A. A.; Al-Naimi, H. A.; Al-Azzawi, A. A. (2005): Material non-linear behaviour of reinforced concrete shell foundations. Journal of Engineering, **11**(4), pp. 655-664.

[2] Al-Raziqi, A. A. (2006): Geotechnical behaviour of shell footings. Ph.D Thesis, University of Putra, Malaysia.

[3] Bujang, B. K.; Mohammed, A. T. (2006): Finite element study using FE code (PLAXIS) on the geotechnical behavior of shell footings. Journal of Computer Science, **2**(1), pp. 104-108.

[4] Chekol, E. T. (2009): A study on the design and advantage of conical type shell foundation using analytical and FEM. M.Sc Thesis, Addis Ababa University.

[5] Huat, B. B. K.; Mohammed, T. A.; Abang Ali, A. A. A.; Abdullah, A. A. (2007): Numerical and field study on triangular shell footing for low rise building. International Journal of Engineering and Technology, **4**(2), pp. 194-204.

[6] IS : 9456-1980 "Indian Standard Code of Practice for Design and Construction of Conical and Hyperbolic Paraboloidal Types of Shell Foundation".

[7] Kurian, N. P.; Devaki, V, M. (2005): Analytical studies on the geotechnical performance of shell foundations. Journal of Geotechnical Engineering, **42**(1), pp. 562-573.

[8] Kurian, N. P.; Shah, S. H. (1985): Parametric studies on the ultimate strength of conical and spherical shell foundations. Journal of Structural Engineering, **12**(2), pp. 49-57.

[9] Kurian, N. P.; Shah, S. H. (1986): Ultimate strength of spherical shell rafts under vertical loads and moments. Bulletin of the International Association for Shell and Spatial Structures, Spain, **25-3**(86), pp. 35-45.

[10] Kurian, N. P. (2006): Shell Foundations: Geometry, Analysis, Design and Construction. Alpha Science International Limited.

[11] Rinaldi, R. (2012): Inverted shell foundation performance in soil. Ph.D Thesis, Concordia University, Canada.

[12] Shah, S. H. (1984): Investigations on the ultimate strength and behaviour of conical and spherical shell foundations under vertical loads and moments. Ph.D. Thesis, Department of Civil Engineering, IIT Madras.

[13] Shahbas, A. (2014): Seismic Investigation of conical shell footings. M.Tech Thesis, University of Calicut, Kerala.

[14] Sharma, A. K. (1973): Investigation of spherical shell foundation. Journal of Soil Mechanics and Foundations Div, ASCE, **99**(SM6), pp. 489-493.