International Journal of Research in Advent Technology, Vol.7, No.6S, June 2019
E-ISSN: 2321-9637
Available online at www.ijrat.org

Review of State-of-Art Image Restoration Techniques

Kalaiah J B, S N Chandrashekara

Abstract—In recent years, image processing is an essential technique for most of the applications such as business, government sectors, medial industry, cinema field, and etc. In image processing, most of the subdomains are there which helps to do their respective process. Among that, Image Restoration (IR) is one of the important domain which helps to retrieve the original image information from the noisy image. Normally, input image is affected by noise during the transmission. So, noise need to be removed to get the original input image information. In this paper, different kind of IR techniques are explained which is implemented in Field Programmable Gate Array (FPGA). In VLSI domain, FPGA is the important process which is used to identify the hardware utilization of the entire algorithm. The process and different methods of IR is studied in this paper.

IndexTerms— Field Programmable Gate Array, Image processing, Image Restoration, Noisy Image, VLSI domain.

I. INTRODUCTION

The recorded images are usually degraded due to environmental effects and imperfections in the imaging system [1]. Image Restoration (IR) is one of the classical issue in the digital image processing, and it aims to reconstructing high frequency details or eliminating the noises from the image [2]. In modern trends, this IR takes place in deblurring, denoising and medical applications [3-6]. There are numerous methods are used for image denoising that is divided into four different categories such as spatial filtering methods, transform domain filtering methods, partial differential equation (PDE) based methods and variational methods [7]. Because of high reflectivity of metal objects the passive millimeter wave images (PMMW) are gets affected and this PMMW is used in aviation, security and environmental monitoring [8].

The IR over the hyper spectral image (HSI) is needed because of its rich spectral information and this HSI is a three dimension data cube [9-10]. The super resolution reconstruction is takes place for IR and the Gaussian prior is used for in this image processing technique. A convolutional regularization algorithms are used for performing the IR as well as the regularization terms defines the image quality [11-12]. Here, some of the filtering techniques (wiener filtering and wave atom transform) are enabled to de-noise the images which is affected by noises, blur and etc. [13-14]. Some of the papers have been implemented IR technique in FPGA. These methods also has some issue like more power, less operating speed, more memory, and etc. some of the existing techniques are explained in below sections.

This paper is organized as follows. Section II, presents a discussion on image degradation. Section III, explains the blurring types. Section IV, explains the deblurring techniques in existing papers. Section IV, explains some conventional literature papers. The conclusion is made in section V.

Manuscript revised May 13, 2019 and published on June 5, 2019
***Kalaiah J B**, Asst.prof. Dept.of ECE, S J C Institute of Technology, Chickballapur,Karnataka, India*
***S N Chandrashekara**, Prof & Head Dept. of CSE, C Byregowda institute of Technology,Kolar, Karnataka, India*

II. MODEL OF IMAGE DEGRADATION

A Model of picture degradation and reclamation process the essential unit of a picture is known as a pixel or picture component for example the picture is separated into little squares called pixels. A picture can be characterized as a two dimensional capacity I which is given in Eq. (1).

$$I = g(\mathrm{x},\mathrm{y})` \qquad (1)$$

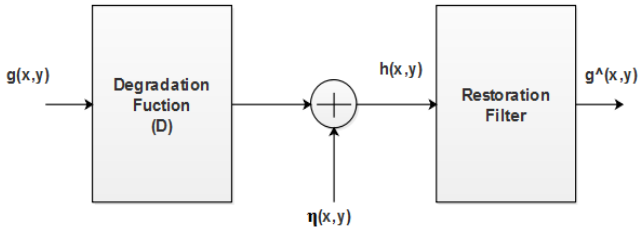

Figure1: Image degradation model

Where, x and y are spatial directions. (x,y) speaks to a pixel. I is the power or dark dimension esteem which is the sufficiency of f anytime (x,y). In the event that the estimations of the directions (spatial organizes) and the abundancy are limited and discrete, at that point it is called advanced picture. The corrupted picture $h(\mathrm{x},\mathrm{y})$ can be represent in Eq. (2).

$$h(\mathrm{x},\mathrm{y}) = \mathrm{d}(\mathrm{x},\mathrm{y}).\mathrm{g}(\mathrm{x},\mathrm{y}) + \eta(\mathrm{x},\mathrm{y}) \qquad (2)$$

Degradation phase

In this area, the formed picture is corrupted with a corruption work and an additive noise. The resulting depiction of this portion is a corrupted picture. In this stage, the corrupted picture is reestablished using in excess of a couple rebuilding channels and an expected picture of the first photograph is delivered as an output. Snapshot

doi: 10.32622/ijrat.76S201940

Restoration ways will likewise be isolated into two classes such as

- Blind
- Non-blind

Blind

Blind Restoration is the process of resorting the original image without checking the object and its size.

Non blind

The Non Blind Restoration should concentrate the image size and type of the image. Based on this only, the restoration is performed.

III. TYPES OF BLUR

In image processing, four major blur effects are there such as average, Gaussian, motion, and out of focus blue which are explained below.

Average Blur (AB)

AB is the one used to reduce the noise and bits in an image moreover when noise is accessible over a complete picture which is shown in Figure 2. This kind of the blurring can be a movement in even and vertical heading and can be round about averaging by sweep S which is evaluated using Eq. (3)

Figure2: Average blur image

$$S = \sqrt{h2 + g2} \qquad (3)$$

Here, h – even size blurring; g – vertical size blurring; S= range size of normal blurring.

Gaussian Blur (GB)

A GB is the picture obscuring result through Gaussian function. It is a broadly used, which results in the illustrations programming, traditionally to decrease detail and diminish picture noise. GB is utilized as a preprocessing stage in the calculations of PC vision in order to progress picture structures at different dimensions. The GB channel impact that mixes a specific various pixel gradually. Blurring is thick in the focus and furthermore edge feather. Utilizing GB to a picture when we need extra power over the impact of the blur.

Figure3: Gaussian blur image

Motion Blur (MB)

The Many sorts of development obscure can be perceived every one of which are a direct result of relative development between recording device and scene. This can be as an interpretation, a revolution, unexpected adjustment of scale, or a couple of mixes of these. The MB impact is a channel that influences the image to appear, apparently, to include so as to move cloud in a specific heading. The development can be estimated by a point or bearing (0 to 360 degrees or – 90 to +90) as well as through division or power in the pixels (0 to 999), in light of the item utilized.

Figure 4: Motion blur image

Out of focus blur

When a camera pictures a 3-D scene onto a 2-D imaging plane, a couple of scene areas are in the middle while diverse parts are unquestionably not. If the gap of the camera is round, the image of any point source is a little plate, called as a circle of perplexity (COC). The dimension of defocus (width of the COC) depends upon the focal length and the opening various focal point, and the separation in the center of camera and article. An exact model delineates the estimation of the COC, as well as the power movement within the COC.

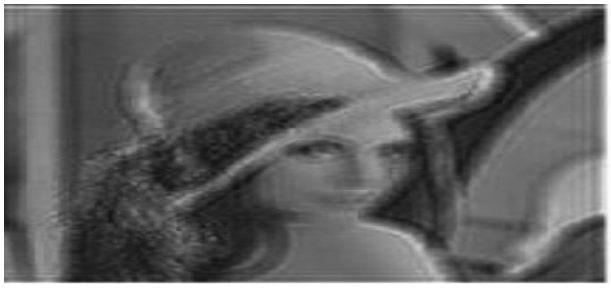

Figure 5: Out of focus blur image

doi: 10.32622/ijrat.76S201940

DE-BLURRING TECHNIQUES IN EXISTING PAPERS

In this section, some of existing techniques are explained which is used to remove the noise. Here, the de-blurring techniques are explained based on the FPGA implementation.

Adaptive Filter Robust (AFR)

Adaptive filters are common in some real time signal processing applications. Most of the papers explained the signal or images are affected by Gaussian noise. Nonetheless, for some applications, for example, electrocardiogram, pulse estimation, low recurrence environmental clamor, submerged acoustic commotion and signal estimation in instrumentation. This investigation displays a modified robust mixed norm (MRMN) adaptive filter algorithm robust to impulse noise with more coverage rate and less Steady State Error (SSE).

The operation of AFR is shown in Figure 6. The input is given to the adaptive filter, LMS algorithm, and sign error algorithm. With the help of adaptive filter output, the desired input is performed addition operation which generates the error. This error given to the comparator which output is connected to the error computation block [15]

IV. UNITS

UseeitherSI(MKS)orCGSasprimaryunits.(SIunitsarestronglyencouraged.)Englishunitsmaybeusedassecondaryunits(inparentheses).**Thisappliestopapersindatastorage.**Forexample,write“15Gb/cm^2(100Gb/in^2).”AnexceptioniswhenEnglishunitsareusedasidentifiersintrade,suchas“3½indiskdrive.”AvoidcombiningSIandCGSunits,suchascurrentinamperesandmagneticfieldinoersteds.Thisoftenleadstoconfusionbecauseequationsdonotbalancedimensionally.Ifyoumustusemixedunits,clearlystatetheunitsforeachquantityinanequation.

TheSIunitformagneticfieldstrength*H*isA/m.However,ifyouwishtouseunitsofT,eitherrefertomagneticfluxdensity*B*ormagneticfieldstrengthsymbolizedas$\mu_0 H$.Usethecenterdottoseparatecompoundunits,e.g.,“A·m^2.”

V. SOMECOMMONMISTAKES

Theword“data”isplural,notsingular.Thesubscriptfortheper meabilityofvacuum$\mu_0$iszero,notalowercaseletter“o.”Theterm forresidualmagnetizationis“remanence”;theadjectiveis“remanent”;donotwrite“remnance”or“remnant.”Usetheword“micrometer”insteadof“micron.”Agraphwithinagraphisan“inset,”notan“insert.”Theword“alternatively”ispreferredtotheword“alternately”(unlessyoureallymeansomethingthatalternates).Usetheword“whereas”insteadof“while”(unlessyouarereferringtosimultaneousevents).Donotusetheword“essentially”tomean“approximately”or“effectively.”Donotusetheword“issue”asaeuphemismfor“problem.”Whencompositionsarenotspecified,separatechemicalsymbolsbyen-dashes;forexample,“NiMn”indicatestheintermetalliccompound$Ni_{0.5}Mn_{0.5}$whereas“Ni–Mn”indicatesanalloyofsomecompositionNi_xMn_{1-x}.

Beawareofthedifferentmeaningsofthehomophones“affect”(usuallyaverb)and“effect”(usuallyanoun),“complement”and“compliment,”“discreet”and“discrete,”“principal”(e.g.,“principalinvestigator”)and“principle”(e.g.,“principleofmeasurement”).Donotconfuse“imply”and“infer.”

Prefixessuchas“non,”“sub,”“micro,”“multi,”and“"ultra”arenotindependentwords;theyshouldbejoinedtothewordstheymodify,usuallywithoutahyphen.Thereisnoperiodafterthe“et”intheLatinabbreviation“*etal*.”(itisalsoitalicized).Theabbreviation“i.e.,”means“thatis,”andtheabbreviation“e.g.,”means“forexample”(theseabbreviationsarenotitalicized).

Anexcellentstylemanualandsourceofinformationforscienc ewritersis[9].

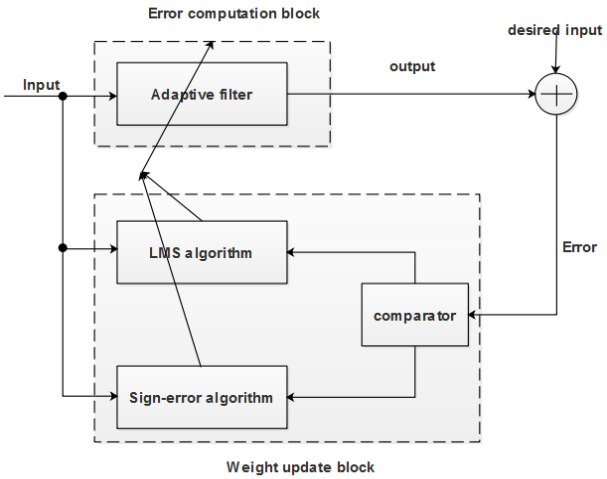

Fig 6. Block diagram of AFR

T model mask architecture

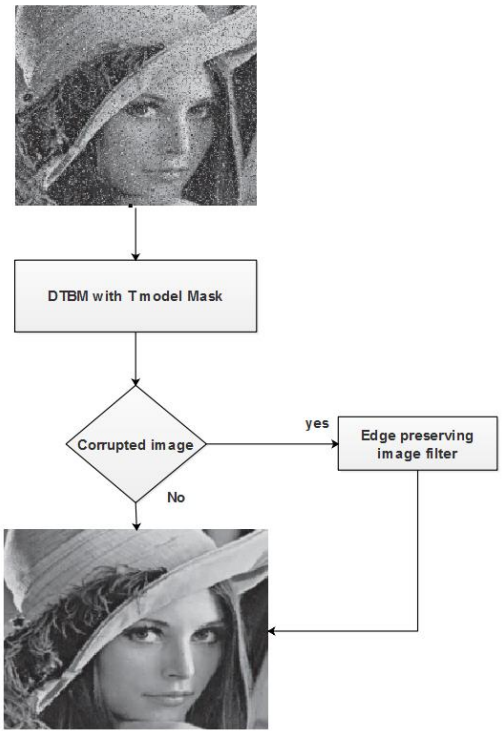

Figure7:Flow chart of T model

doi: 10.32622/ijrat.76S201940

The flow chart of T model is shown in Figure 7. The noisy images are perform the T mask architecture model. If the output has corrupted image, the edge preserving image filter operation has been performed. Otherwise, the denoising output is deliver to the output. The line buffer and register bank of the proposed system is shown in Figure 8. The overall pixels are divided into small blocks which is stored in register bank. The line buffer output also given to the register which is feedback with line buffer

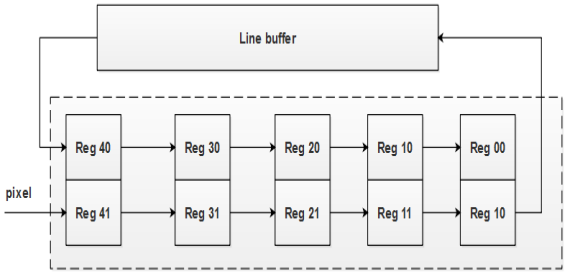

Figure 8: Proposed method line buffer and register bank

The procedure of picture securing, transformation of pictures into various structure and transmission of pictures for different applications the inventiveness of capture pictures are influenced by various noises. The different systems are proposed for reducing the noise in digital pictures. The principle issue of these strategies is degrading the picture data. So that, T model architecture has been implemented [16].

Neuro fuzzy system

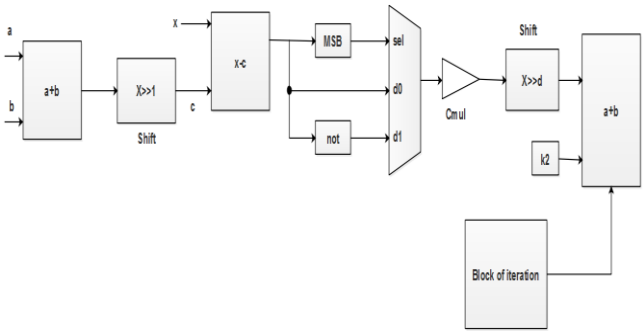

Figure 9: Beta membership function block diagram

Equipment execution of regular interval type 2 neuro-fuzzy frameworks with on chip learning is fundamental for real time applications. Moreover, existing algorithm require more time for execution. To overcome this issue, we propose another interval type 2 neuro-fuzzy design. As needs be, the quantity of layers is diminished owing to utilizing Beta participation capacities. Additionally, a simplified output computing task is connected. For actualizing Beta capacities, an exact and reduced Centered Recursive Interpolation (CRI) strategy is utilized. The membership function block diagram is shown in Figure 9. The logicaloperation has been performed based on Figure 9. The block iteration design output is connected to final stage of addition process [18]

VI. Literature Survey

Researchers suggested several restoring algorithms for the denoising. In this scenario, a brief evaluation of some important contributions to the existing methods are presented below.

Author	Methodology	Advantage	Disadvantage	Performance Measure
Chintan A. Parmar et al.[15]	Modified Robust Mixed Norm (MRMN) adaptive filter is used to remove the noisy pixel.	This MRMN architecture obtains higher convergence rate and lower Steady State Error (SSE).	This architecture occupies more percentage of MULT (61%) and slices (11%). Low Frequency (27.89MHz)	MLUT-19 Slice – 643 4 input LUT – 895 Clock freq – 32.06 MHz
Hossein Khodabakhshi Rafsanjani et al. [17]	Perona-Malik (PM) diffusion co-efficient is analyzed regarding to its flux.	Image is divided into three segments which results smoothing images.	The main drawbacks of the PM diffusion is the new features appearing in the processed image.	PNSR: Lena – 30.53 Boat – 28.52 Baboon – 27.20
Manel Elloumi et al.[18]	This paper, interval type2 Neuro-fuzzy architecture is proposed to eliminate the salt and pepper noise.	Learning algorithm and gradient descent technique is applied to adjust the beta function and accuracy for gives noise less image in output terminal.	In this work, there is no usage of any optimal adder which results more power in the entire architecture.	Slices – 1606 External IOb-112 PNSR - 27

doi: 10.32622/ijrat.76S201940

Anoop suraj et al. [19]	This paper introduced discrete wavelet transform based image de-noising FPGA architecture.	Least squares support vector machine based frequency band selection method gives better de-noising image	This DWT based denoising has some drawbacks such as Oscillations, shift variance, aliasing, and lack of directionality.	Edge strength – 0.6805 Fusion factor – 1.7031
Jianlu ji et al. [20]	Design of parallel wave front restoration algorithm based on FPGA	More bandwidth. Less correction effects	The output images also affected by noises. Not possible to retrieve original image as much as possible.	Frequency – 2000Hz SNR – 8 Coherence length – 15cm
Payam sanaee et al. [21]	Structural refinement method	More number of noisy pixels are identified to remove the noise. This structure has more recognizable for low density impulse noise.	After restoration, the original image information may be loss.	PNSR: 37.69 (10% noise density) 31.76 (30% of noise density)
Parham taghinia et al. [22]	Adaptive window size	High PSNR. More operating speed. Less hardware resource	More memory space in required to store the intermediate results data.	PNSR: Boat – 38.56 (30% of noise density) Lena – 37.76 (30% of noise density)

VII. CONCLUSION

In this paper, image degradation process, types of blurring and different restoring algorithms have been explained such as adaptive filter robust, T model structure, and Neuro fuzzy system. These existing papers has some drawbacks such as less PNSR, information loss, etc. The captures images are often affected by the noise which degrade the image quality and information. While designing this algorithm in FPGA, so many constrains need to face such as more area, power, less frequency, less delay, and etc. These all the problems need to be solved with proper FPGA architecture. In future, new FPGA restoring architecture will be used to improve the hardware utilization.

REFERENCES

[1]. (X. Lv, Y. Z. Song, and F. Li, "An efficient nonconvex regularization for wavelet frame and total variation based image restoration," Journal of Computational and Applied Mathematics, vol. 290, pp. 553-566, 2015.
[2]. A. Bouhamidi, R. Enkhbat, and K. Jbilou, "Conditional gradient Tikhonov method for a convex optimization problem in image restoration," Journal of Computational and Applied Mathematics, vol. 255, pp. 580-592, 2014.
[3]. W. He, H. Zhang, L. Zhang, and H. Shen, "Total-variation-regularized low-rank matrix factorization for hyperspectral image restoration," IEEE Transactions on Geoscience and Remote Sensing, vol. 54, pp. 178-188, 2016.
[4]. R. Dharmarajan, and K. Kannan, "A hypergraph-based algorithm for image restoration from salt and pepper noise," AEU-International Journal of Electronics and Communications, vol. 64, pp. 1114-1122, 2010.
[5]. G. Paul, J. Cardinale, and I. F. Sbalzarini, "Coupling image restoration and segmentation: a generalized linear model/Bregman perspective," International journal of computer vision, vol. 104, pp. 69-93, 2013.
[6]. H. H. Chang, C. Li, and A. H. Gallogly, "Brain MR Image Restoration Using an Automatic Trilateral Filter With GPU-Based Acceleration," IEEE Transactions on Biomedical Engineering, vol. 65, pp. 400-413, 2018.
[7]. L. Tang, Z. Fang, C. Xiang, and S. Chen, "Image selective restoration using multi-scale variational decomposition," Journal of Visual Communication and Image Representation, vol. 40, pp. 638-655, 2016.
[8]. T. Liu, Z. Chen, S. Liu, Z. Zhang, and J. Shu, "Blind image restoration with sparse priori regularization for passive millimeter-wave images," Journal of Visual Communication and Image Representation, vol. 40, pp. 58-66, 2016.
[9]. H. Fan, Y. Chen, Y. Guo, H. Zhang, and G. Kuang, "Hyperspectral image restoration using low-rank tensor recovery," IEEE Journal of Selected Topics in Applied Earth Observations and Remote Sensing, vol. 10, pp. 4589-4604, 2017.
[10]. Y. Xie, Y. Qu, D. Tao, W. Wu, Q. Yuan, and W. Zhang, "Hyperspectral Image Restoration via Iteratively Regularized Weighted Schatten p-Norm Minimization," IEEE Trans. Geoscience and Remote Sensing, vol. 54, pp. 4642-4659, 2016.
[11]. J. Sevcik, V. Smidl, and F. Sroubek, "An Adaptive Correlated Image Prior for Image Restoration Problems," IEEE Signal Processing Letters, 2018.
[12]. X. Zhi, S. Jiang, W. Zhang, D. Wang, and Y. Li, "Image degradation characteristics and restoration based on regularization for diffractive imaging," Infrared Physics & Technology, vol. 86, pp. 226-238, 2017.
[13]. H. Chen, Z. Cen, C. Wang, S. Lan, and X. Li, "Image restoration via improved Wiener filter applied to optical sparse aperture systems," Optik-International Journal for Light and Electron Optics, vol. 147, pp. 350-359.
[14]. Z. Mbarki, H. Seddik, and E. B. Braiek, "A rapid hybrid algorithm for image restoration combining parametric Wiener filtering and wave atom transform," Journal of Visual Communication and Image Representation, vol. 40, pp. 694-707, 2016.
[15]. C. A. Parmar, B. Ramanadham, and A. D. Darji, "FPGA implementation of hardware efficient adaptive filter robust to

doi: 10.32622/ijrat.76S201940

impulsive noise," IET Computers & Digital Techniques, vol. 11, pp. 107-116, 2016.

[16]. N. Rajeswaran, S. Karpagaabirami, C. Gokilavani, and R. Rajendran, "FPGA based Denoising Method with T-Model mask architecture design for removal of noises in images," Procedia Computer Science, vol. 85, pp. 519-526, 2016.

[17]. H. K. Rafsanjani, M. H. Sedaaghi, and S. Saryazdi, "Efficient diffusion coefficient for image denoising," Computers & Mathematics with Applications, vol. 72, pp. 893-903, 2016.

[18]. M. Elloumi, M. Krid, and D. S. Masmoudi, "FPGA implementation of a new interval type-2 Beta neuro-fuzzy system with on-chip learning for image denoising application", Computers & Electrical Engineering, vol. 55, pp. 164-179, 2016.

[19]. A. A. Suraj, M. Francis, T. S. Kavya, and T. M. Nirmal, "Discrete wavelet transform based image fusion and de-noising in FPGA," Journal of Electrical Systems and Information Technology, vol. 1, pp. 72-81, 2014.

[20]. J. Jia, J. Wang, J. Zhao, L. Wang, X. Lin, and X. Yang, "Design of parallel wave-front restoration algorithm based on FPGA," Optik, vol. 176, pp. 168-174.

[21]. P. Sanaee, P. Moallem, and F. Razzazi, "A structural refinement method based on image gradient for improving performance of noise-restoration stage in decision based filters," Digital Signal Processing, vol. 75, pp. 242-254, 2018.

[22]. P. T. Jelodari, M. P. Kordasiabi, S. Sheikhaei, and B. Forouzandeh, "FPGA implementation of an adaptive window size image impulse noise suppression system," Journal of Real-Time Image Processing, pp. 1-12, 2017

doi: 10.32622/ijrat.76S201940