International Journal of Research in Advent Technology, Vol.7, No.5S, May 2019
E-ISSN: 2321-9637
Available online at www.ijrat.org

Dissolved Gas Analysis: Comparison of IEC and Rogers Method using MATLAB GUI

Musaib Ayoub[1], and Kulraj Kaur[2]
[1,2]*Lovely professional university, Phagwara, India*
**Contact: lonemusaiblone@gmail.com, kulraj.15720@lpu.co.in*

Abstract— This paper presents a comparison between two methods of dissolved gas analysis, IEC and Rogers ratio method. Dissolved gas analysis is widely used method for the life assessment of power transformers. Since, transformers form the vital and economically large part of the system. Therefore for the assessment and examining best methods should be implemented. So in order to achieve transparency in results the various approaches of DGA are compared for each other.

Keywords—Transformers, Rogers Method, IEC Method, Dissolved Gas Analysis

1. INTRODUCTION

Transformer forms an important part of electrical utility systems as it connects two electrical circuits and transfers power between them. Transformers are among the costliest components of transmission and distribution systems. Therefore, their protection is of utmost importance so as to eliminate the chances of faults and outages and also to increase the transformer efficiency and shelf life. Transformer contains windings as its main part. To provide the insulation between these windings and also between winding as transformer body mineral oils are used as insulators. These mineral oils not only perform the insulation functions, but also act a coolant so as to absorb the heat produced. Transformer oils also provide diagnostics of the transformer health. Whenever the transformer is subjected to some fault, heat is produced inside the transformer. Different kinds of gases are generated in the transformer oil. Every fault produced its characteristic gases in the transformer oil in concentrations specific to that very fault. Therefore dissolved gas analysis is carried out to know the health status of the transformer. Detection of the specific gases indicates that the transformer is under fault. The faults indicated by dissolved gas analysis, are corrected according to the analysis. If these faults persist in the power system, the extent of damage may be enormous and also may consume lots of investment.

So in order to protect transformer against such damages, transformer oil is diagnosed and faults are detected. The DGA is an attested method of the fault detection. It involves many processes of sampling of oil units, and achieving gases from the oil by different physiochemical methods such as gas chromatography etc. After the gases have been extracted from oil, the next purpose is to know the concentration of these gases which can be achieved from different methods discussed in the literature.

In this work, five different methods of dissolved gas analysis namely; Dornenburg, Key gas, IEC, Duval Triangle, and Rogers will be discussed along way of diagnosis including different conditional probabilities. Fuzzy logic Interpretation of these methods by the Graphical User interface of these methods in MATLAB for the visual establishment of these methods are developed. This method will increase the efficiency by at least 10% compared to the efficiency of methods mentioned above when taken individually. This method can be also be used for other components containing oil as insulating material.

2. NEED FOR DISSOLVE GASANALYSIS

The power system engineers are undergoing great stress in order to meet the growing demand for the electrical energy. Lots of research is going on different aspects of power transmission and distribution. However, the research for the oil insulated transformers has been in hibernation for last hundred years. Presently most of the transformers are susceptible to the collective stresses that ultimately lead to the early expiry of these transformers. Therefore reduces the shelf life of transformers. Hence need for replacing and repairing arises so as to ensure hassle free power supply. Instead of replacement and repairment as it becomes more economical, power utility companies find it easy to continuously monitor and diagnose faults well in advance. Therefore companies are paying full attention at adapting different diagnostic methods, which continuously hand over condition of these transformers. For the said purposes dissolve gas analysis provide efficient and accurate method of online diagnosis and monitoring. However this methods suffers from several disadvantages, it is costly as well as pose some technical boundaries. Also the accuracy of distinguishing different kinds of faults is some sort of disadvantage to this method.

In developed nations the shelf life of transformers in average has crossed the limit of 30 years, which in earlier times used to be maximum age for which the transformers could operate with high reliability. Also deregulations in the power sector enforces the utility companies to stop investing in new power infrastructure for so many years instead operating the available components to their highest capacity, so as to minimize the costs of service.

Keeping the above limitations and advantages in mind, the continuous diagnosis of transformer health becomes of much importance. It is better to adapt some preventive measures instead of repairements and replacements of the components. This continuous monitoring of transformer health by adapting different strategies and methods not only reduce the cost burdens on the utility companies but also increases the life cycle of the transformers. Most of the present day transformers are undergoing large load stresses which increase the probability of faults and different fire hazards which in rare cases lead to explosions. Conditions that are not favoured due to various reasons like electrical, thermal and mechanical stresses along with the bad quality of insulating materials may lead to damages to the power transformers to such an extent that the damage becomes irreversible in nature

3. COMPARISON

In this paper, IEC and Rogers methods have been elaborated with fuzzy models. These models were evolved to find out better among the two methods. Although the two methods discussed seem quite similar. However basic difference in the method of evaluation differentiates the two. Also, the two methods form different kinds of patterns and also the gas concentrations in the transformers were found to be different. The methods used in this report possess lofty kind of accuracy and were found consistent. The different techniques viz. IEC and Rogers are discussed as follows

The table below was used as the source of data for Fuzzy illustration of said techniques

S. No	H_2	CH_4	C_2H_2	C_2H_4	C_2H_6	CO	CO_2	F B ICE	F B Rogers	F B key gas
1	495	1775	2	2438	276	293	2999	Thermal	Out of order	Thermal
2	80	619	0	2480	326	268	2952	Thermal	Out of order	Thermal
3	21	24	0	98	23	159	917	Out of order	Thermal	Thermal
4	231	3997	0	5584	1726	0	2194	Thermal	Out of order	Thermal
5	127	24	81	32	0	0	2024	Arching	Arching	Arching
6	2	7	0	0	0	0	132	Out of order	Out of order	Normal
7	217	286	884	458	14	176	1544	Arching	Out of order	Arching
8	54	0	0	4	0	106	1303	Out of order	Out of order	Normal
9	246	43	53	21	0	218	2069	Arching	Arching	Arching

Table 1: Case Study of DGA

3.1 IEC Method:

IEC codes are in use from last so many years and its continuous use across globe for the detection of transformer faults has gained much experience. In early times, the concentration of individual gases was used for the transformer fault diagnosis. However the researchers in recent times have proposed several ratios of certain gases that provide more used friendly and simple approach for the diagnosis.

Tables given below show the IEC codes for DGA.

Ratio code	Range	Code
$X_1=C_2H_2/C_2H_4$	x<0.1	0
	0.1≤x≤3	1
	x>3	2
$X_2=CH_4/H_2$	x<0.1	1
	0.1≤x≤1	0
	x>1	2
$X_3=C_2H_4/C_2H_6$	x<1	0
	1≤x≤3	1
	x>3	2

Table 2: IEC Method Ranges and Codes

3.1.1 Fuzzy Interpretation for IEC Codes for Dissolve Gas Analysis

Three ratios are present in this method, which are given as input to the fuzzy logic controller. The ratios are provided below

- X1= C2H2/ C2H4
- X2= CH4/ H2
- X3= C2H4/ C2H6

X_1	X_2	X_3	Characteristic fault
0	0	0	Normal Aging
0	1	0	Partial Discharge Of Low Energy Density
1	1	0	Partial Discharge Of High Energy Density
1-2	0	1-2	Discharge Of Continuous Sparking
1	0	2	Discharge Of High Energy (Sparking)
0	0	1	Thermal Fault <150°C
0	2	0	Thermal Fault 150°C-300°C

Table 3: Table for ICE Codes

From the table 2, each ratio has three ranges. Each of these ranges acts as a membership function. Each of the ratios X1, X2, X3 are given as variable to the fuzzy logic controller. Different types of membership functions can be used. In this work, trapezoidal type is used as it is most frequently used in fuzzy based systems. Mamdani system has been used as fuzzy interference system.

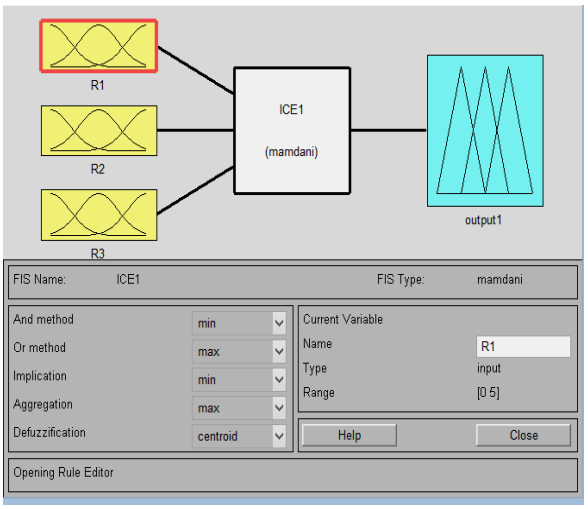

Figure 1: Fuzzy Logic Design

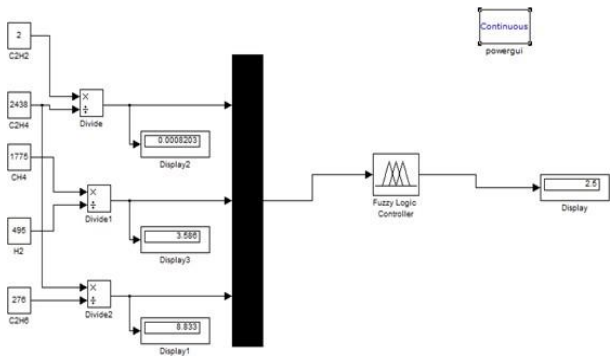

Figure 2: Fuzzy Logic Model for IEC

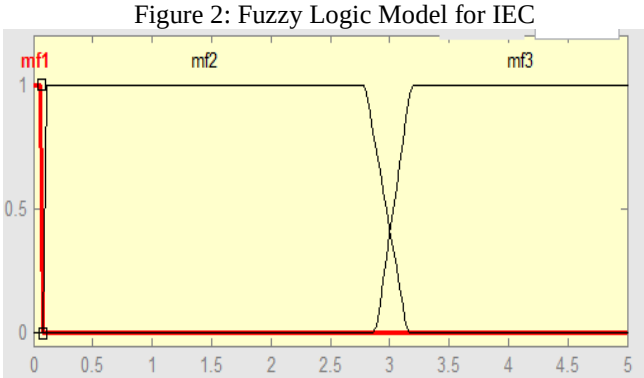

Figure 3: Membership Functions For X1 Ratio

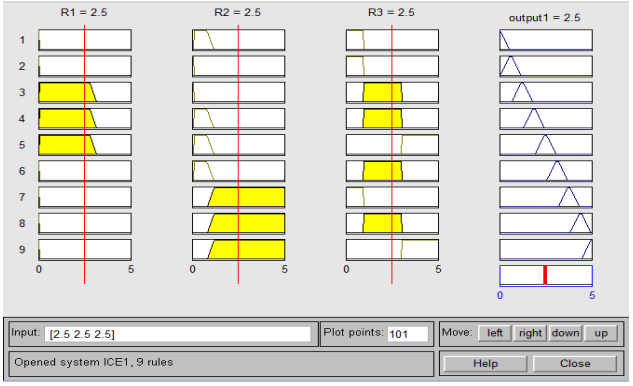

Figure 4: IEC code Rule Set

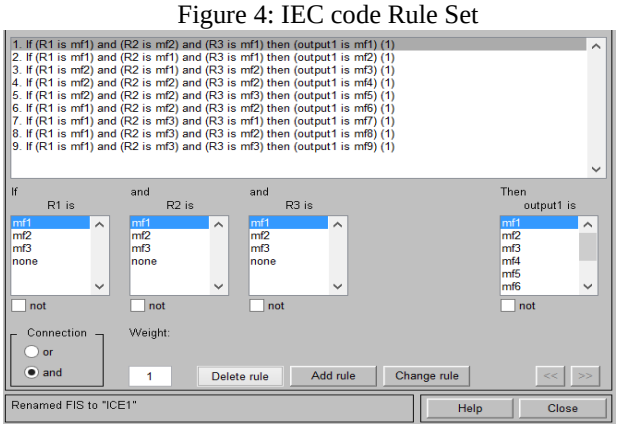

Figure 5: Rule Editor

3.2 Rogers Method:

Among all the dissolve gas analysis approaches, Rogers ration method is the most frequently used method. This method discerns thermal faults as assimilated to other methods. Four ratios are anatomized by Rogers Method. Different techniques aided by computers like Fuzzy systems are used to assess the dealings between the types of fault occurred and the gases produced.

The four ratios are as follows

- C_2H_6/CH_4
- CH_4/H_2
- C_2H_2/C_2H_4
- C_2H_4/C_2H_6

Below are given the two tables that are exercised in the Rogers method, the first table presents the ratio codes and the second table flashes the diagnosis. This method considers only gases above routine concentrations, pinpoint administering this method might still misstate the data. Decomposition over a range of temperature that is limited is only denoted by the ratio C_2H_6/CH_4.

Ratio code	Range	Code
$XR_1 = CH_4/H_2$	x<0.1	5
	0.1≤x≤1.0	0
	01.0≤x≤3.0	1
	x>3.0	
$XR_2 = C_2H_6/CH_4$	x<1.0	0
	x≥1.0	1
$XR_3 = C_2H_4/C_2H_6$	x<1.0 0	0
	1.0≤x≤3.0	1
	1 x>3.0	2

Table 4: Ranges and codes assigned for Rogers Method

XR_1	XR_2	XR_3	XR_4	Diagnosis
0	0	0	0	Normal deterioration
5	0	0	0	Partial discharge
1-2	0	0	0	Slight over heating
1-2	1	0	0	Overheating 150-200°C
0	1	0	0	Overheating 200°c-300°C
0	0	1	0	General conductor overheating
1	0	1	0	Winding circulating currents
1	0	2	0	Core & tank circulating currents
0	0	0	1	Flashover without power

Table 5: Code Scheme For Rogers Method

3.1.2 Fuzzy interpretation of Rogers method for dissolve gas analysis

The Four ratios XR_1, XR_2, XR_3 and XR_4 used in this method shticks as input variables. Since the ranges for XR_1 are four, therefore four membership functions are used for this input variable. Similarly XR_2 has two ranges, XR_3 and XR_4 has three different ranges. So, they contain two, three and three membership functions respectively. The four ratios are defined as follows;

- $XR_1=CH_4/H_2$
- $XR_2=C_2H_6/CH_4$
- $XR_3=C_2H_4/C_2H_6$ and
- $XR_4=C_2H_2/C_2H_4$

The implementation of Rogers method using fuzzy systems is as follows.

Fuzzy Model for Rogers Method

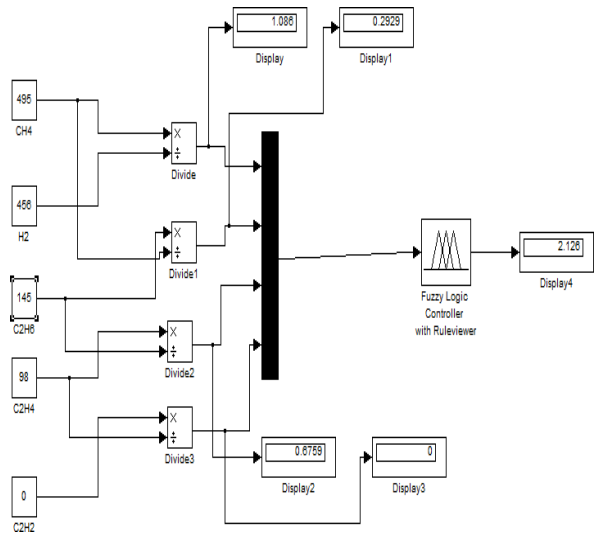

Figure 6: Rogers Method using Fuzzy Logic Model

The membership functions for the different gas ratios acting as inputs to fuzzy logic controller are as follows.

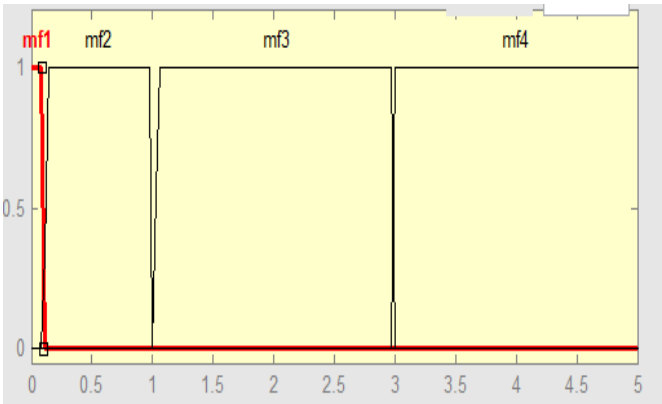

Figure 7: Membership Functions for ratio XR1

There can be four different faults for example, partial discharge, arching, thermal and normal. Each of these faults is assigned some numeric value. Therefore output of the model will be the fault type based on the assigned codes. The assigned codes to these faults and the membership functions for the output of fuzzy logic controller are shown underneath.

Fault type	Code range on fuzzy model
Normal	1-4
Thermal	4-8
Arching	6-12
Partial discharge	12-16

Table 6: Fault Codes for output of fuzzy controller

The output membership function for output is shown beneath

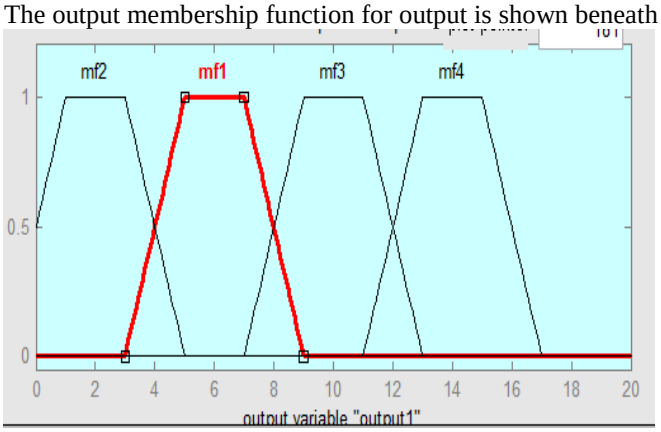

Figure 8: Membership Functions for Output

As in the IEC method, here also Mamdani system is used as fuzzy interference system. The set of rules for this method is shown below

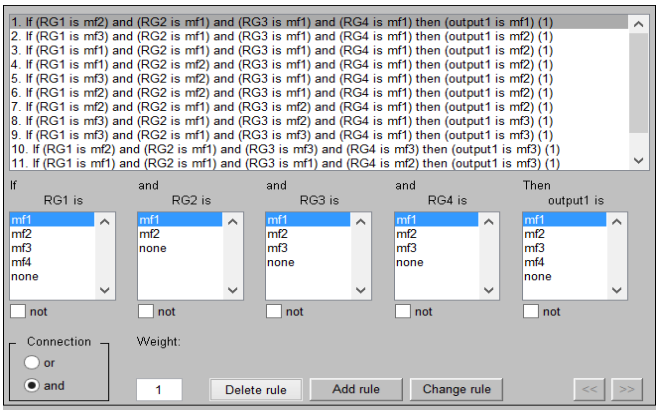

Figure 9: Rule Editor

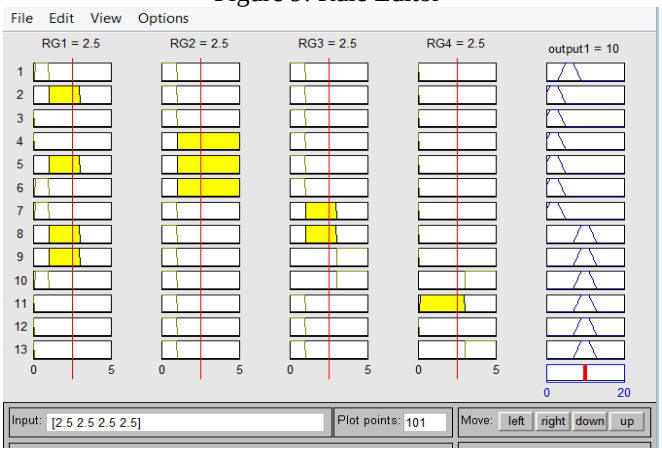

Figure 10: Rule Base Viewer

4. CONCLUSION

Dissolve gas analysis is the cheapest technology currently available and easy to understand and interpret different faults. These advantages project dissolve gas analysis as an effective tool for protection of power transformers against any failure or hazard. The diagnosis and the interpretation of results takes into account the results from laboratory methods, health history of the transformer, the physical condition of transformers, maintenance history and the age of transformers. Dissolve gas analysis by and by considers concentration of gases generated in transformers in the range of Parts Per Million (PPM). Therefore there exists lots of scope for this method in detection and interpretation of gas results to conclude presence of any faults on the transformer. It is pertinent to mention here that although scope for future development of this technique exists but to analyze and interpret different gas pattern in the transformer needs more advanced laboratory tests or detection of any buddy fault and also to know the extent of fault damage. Apart from this many power transmission and distribution companies are using this method for continuous online monitoring of transformers, so as to assure them not being damaged permanently and also to reduce new investment on power system components. Because of these reasons it is being adored by power supply agencies.

- Rogers method is most common method of dissolve gas analysis. However fails to detect certain faults.
- All the equipments having oil filled body, health condition of those equipments can also be well assessed. However replacement of present mineral oil with some other saturated hydrocarbon can reveal the details of dissolved gases and faults in detail. Because

sometime different gases evolved from the mineral oil produces ambiguous results.

- Till date Duval triangle methods is not for its easy comprehension of results and is most efficient method. Even an amateur can well handle the method for analyzing different faults gases and interpreting results. This method provides inaccuracy not more than five percent in all cases.
- These methods can be implemented using different computer aided softwares and can provide better results when results are compared using fuzzy logic systems

REFERENCES

[1] Jose Ignacio Aizpurua, Victoria M. Catterson, Brian G. Stewart, and Stephen D. J. McArthur, Brandon Lambert, BismarkAmpofo, Gavin Pereira, James G. Cross:"Improving the Accuracy of TransformerDGA Diagnosis in the Presence of Conflicting Evidence," Electrical Insulation Conference (EIC), Baltimore, MD, USA, 11 - 14 June 2017

[2] Priyesh Kumar Pandey, Harmendra Singh, M Rao, and R K Jarial -- 2nd International Conference on Emerging Trends in Engineering and Technology (ICETET'2014), May 30-31, 2014 London (UK): "Emerging Trends in Diagnosis and Condition Assessment of Power Transformers Based on Health Index"I. S. Jacobs and C. P.
Bean, "Fine particles, thin films and exchange anisotropy," in Magnetism, vol. III, G. T. Rado and H. Suhl, Eds. New York: Academic, 1963, pp. 271–350.

[3] Sherif S.M. Ghoneim, Ibrahim B.M. Taha—International Journal of Electrical Power & Energy Systems, 22 February 2016: "A new approach of DGA interpretation technique for transformer fault diagnosis".

[4] U. Mohan Rao & D. Vijay Kumar--International Journal of Electrical and Electronics Engineering (IJEEE), Vol-1, Iss-3, 2012: "A Novel Technique to Precise the Diagnosis of Power Transformer Internal Faults".

[5] Daniel R. Malabanan and Allan C. Nerves--2015 IEEE:"Power Transformer Condition Assessment using an Immune Neural Network Approach to Dissolved Gas Analysis".

[6] Ibrahim B. M. Taha, Hatim G. Zaini, Sherif. S. M. Ghoneim-- 15th International Middle East Power Systems Conference (MEPCON'12), Alexandria University, Egypt, December 23-25, 2012:"Comparative Study between Dorneneburg and Rogers Methods for Transformer Fault Diagnosis Based on Dissolved Gas Analysis Using Matlab Simulink Tools".

[7] Huo-Ching Sun, Yann-Chang Huang, Chao-Ming Huang--2nd International Conference on Advances in Energy Engineering (ICAEE).2011:"A Review of Dissolved Gas Analysis in Power Transformers".

[8] Haroldo de Faria Jr, João Gabriel Spir Costa, Jose Luis Mejia Olivas-- Renewable and Sustainable Energy Reviews 46 (2015):"A review of monitoring methods for predictive maintenance of electric power transformers based on dissolved gas analysis".

[9] Ekkarach Wannapring, Cattareeya Suwanasri, Thanapong Suwanasri-
-2016 IEEE:"Dissolved Gas Analysis Methods for Distribution Transformers".

[10] TriparnaNandy, Amit Gupta, Nikhileshwar P. Adhikari--International Conference on Computation of Power, Energy Information and Communication (ICCPEIC) 2016: "Study of Dissolved Gas Analysis for Pre-Determination of Faults in Transformers"..